MICROWAVE MIXERS

By ROBERT V. POUND
JUNIOR FELLOW (SOCIETY OF FELLOWS)
HARVARD UNIVERSITY

With a chapter by ERIC DURAND
ROCKET SONDE RESEARCH SECTION
NAVAL RESEARCH LABORATORY

EDITED BY
C. G. MONTGOMERY D. D. MONTGOMERY

OFFICE OF SCIENTIFIC RESEARCH AND DEVELOPMENT
NATIONAL DEFENSE RESEARCH COMMITTEE

FIRST EDITION

NEW YORK AND LONDON
McGRAW-HILL BOOK COMPANY, INC.
1948

MASSACHUSETTS INSTITUTE OF TECHNOLOGY
RADIATION LABORATORY SERIES

LOUIS N. RIDENOUR, *Editor-in-Chief*

MICROWAVE MIXERS

624.5 4 1 36
Po

MASSACHUSETTS INSTITUTE OF TECHNOLOGY

RADIATION LABORATORY SERIES

Board of Editors

LOUIS N. RIDENOUR, *Editor-in-Chief*
GEORGE B. COLLINS, *Deputy Editor-in-Chief*

BRITTON CHANCE, S. A. GOUDSMIT, R. G. HERB, HUBERT M. JAMES, JULIAN K. KNIPP, JAMES L. LAWSON, LEON B. LINFORD, CAROL G. MONTGOMERY, C. NEWTON, ALBERT M. STONE, LOUIS A. TURNER, GEORGE E. VALLEY, JR., HERBERT H. WHEATON

---

1. RADAR SYSTEM ENGINEERING—*Ridenour*
2. RADAR AIDS TO NAVIGATION—*Hall*
3. RADAR BEACONS—*Roberts*
4. LORAN—*Pierce, McKenzie, and Woodward*
5. PULSE GENERATORS—*Glasoe and Lebacqz*
6. MICROWAVE MAGNETRONS—*Collins*
7. KLYSTRONS AND MICROWAVE TRIODES—*Hamilton, Knipp, and Kuper*
8. PRINCIPLES OF MICROWAVE CIRCUITS—*Montgomery, Dicke, and Purcell*
9. MICROWAVE TRANSMISSION CIRCUITS—*Ragan*
10. WAVEGUIDE HANDBOOK—*Marcuvitz*
11. TECHNIQUE OF MICROWAVE MEASUREMENTS—*Montgomery*
12. MICROWAVE ANTENNA THEORY AND DESIGN—*Silver*
13. PROPAGATION OF SHORT RADIO WAVES—*Kerr*
14. MICROWAVE DUPLEXERS—*Smullin and Montgomery*
15. CRYSTAL RECTIFIERS—*Torrey and Whitmer*
16. MICROWAVE MIXERS—*Pound*
17. COMPONENTS HANDBOOK—*Blackburn*
18. VACUUM TUBE AMPLIFIERS—*Valley and Wallman*
19. WAVEFORMS—*Chance, Hughes, MacNichol, Sayre, and Williams*
20. ELECTRONIC TIME MEASUREMENTS—*Chance, Hulsizer, MacNichol, and Williams*
21. ELECTRONIC INSTRUMENTS—*Greenwood, Holdam, and MacRae*
22. CATHODE RAY TUBE DISPLAYS—*Soller, Starr, and Valley*
23. MICROWAVE RECEIVERS—*Van Voorhis*
24. THRESHOLD SIGNALS—*Lawson and Uhlenbeck*
25. THEORY OF SERVOMECHANISMS—*James, Nichols, and Phillips*
26. RADAR SCANNERS AND RADOMES—*Cady, Karelitz, and Turner*
27. COMPUTING MECHANISMS AND LINKAGES—*Svoboda*
28. INDEX—*Henney*

MICROWAVE MIXERS

By ROBERT V. POUND
JUNIOR FELLOW (SOCIETY OF FELLOWS)
HARVARD UNIVERSITY

With a chapter by ERIC DURAND
ROCKET SONDE RESEARCH SECTION
NAVAL RESEARCH LABORATORY

EDITED BY
C. G. MONTGOMERY D. D. MONTGOMERY

OFFICE OF SCIENTIFIC RESEARCH AND DEVELOPMENT
NATIONAL DEFENSE RESEARCH COMMITTEE

FIRST EDITION

NEW YORK AND LONDON
McGRAW-HILL BOOK COMPANY, INC.
1948

V

TK 6573
.M41
V.16
c.2

MICROWAVE MIXERS

COPYRIGHT, 1948, BY THE
McGRAW-HILL BOOK COMPANY, INC.
PRINTED IN THE UNITED STATES OF AMERICA

All rights reserved. This book, or parts thereof, may not be reproduced in any form without permission of the publishers.

SCIENCE LIBRARY

MASS. INST. TECH.
JAN 22 1948
LIBRARY

THE MAPLE PRESS COMPANY, YORK, PA.

Foreword

THE tremendous research and development effort that went into the development of radar and related techniques during World War II resulted not only in hundreds of radar sets for military (and some for possible peacetime) use but also in a great body of information and new techniques in the electronics and high-frequency fields. Because this basic material may be of great value to science and engineering, it seemed most important to publish it as soon as security permitted.

The Radiation Laboratory of MIT, which operated under the supervision of the National Defense Research Committee, undertook the great task of preparing these volumes. The work described herein, however, is the collective result of work done at many laboratories, Army, Navy, university, and industrial, both in this country and in England, Canada, and other Dominions.

The Radiation Laboratory, once its proposals were approved and finances provided by the Office of Scientific Research and Development, chose Louis N. Ridenour as Editor-in-Chief to lead and direct the entire project. An editorial staff was then selected of those best qualified for this type of task. Finally the authors for the various volumes or chapters or sections were chosen from among those experts who were intimately familiar with the various fields, and who were able and willing to write the summaries of them. This entire staff agreed to remain at work at MIT for six months or more after the work of the Radiation Laboratory was complete. These volumes stand as a monument to this group.

These volumes serve as a memorial to the unnamed hundreds and thousands of other scientists, engineers, and others who actually carried on the research, development, and engineering work the results of which are herein described. There were so many involved in this work and they worked so closely together even though often in widely separated laboratories that it is impossible to name or even to know those who contributed to a particular idea or development. Only certain ones who wrote reports or articles have even been mentioned. But to all those who contributed in any way to this great cooperative development enterprise, both in this country and in England, these volumes are dedicated.

L. A. DuBridge.

PRINTED IN THE UNITED STATES OF AMERICA

Preface

THIS volume describes the design of the various microwave circuits that have been used as mixers in the microwave region at the Radiation Laboratory. The mixers convert the microwave signal into a signal at a lower frequency, where conventional lumped-constant circuits and multiple-element vacuum tubes are used. For information concerning the design of a complete microwave superheterodyne receiver, of which the mixer is a part, Vol. 23 of this series is recommended. Low-frequency amplifiers of many types, for use following the mixer, are described in Vol. 18. A complete treatment of crystal rectifiers, which are the hearts of the mixers described in the present volume, is given in Vol. 15, Duplexing circuits often required in pulse radar, and the tubes used in them are described in Vol. 14. Low-level oscillators, which are used as local oscillators for the mixers, are treated in Vols. 7 and 11. Because the frequency of the local oscillator determines the sensitive frequency of the mixer, automatic frequency control has been considered to be closely related to the mixer; for this reason, the chapter on this subject by Eric Durand has been included in this volume.

I wish to take this opportunity to thank H. F. Webster for his cooperation in the design of the mixers developed at the Radiation Laboratory from 1943 to 1945, and Florence M. Carroll and Rosemarie Saponaro for their very great assistance in the preparation of the manuscript.

R. V. POUND.

CAMBRIDGE, MASS.
June, 1946

Contents

FOREWORD BY L. A. DUBRIDGE v

PREFACE vii

CHAP. 1. INTRODUCTION 1

1·1. Definition of Terms 2
1·2. Effect of Type of Signal on Receiver Design 4
1·3. Qualitative Discussion of Duplexing Components 6
1·4. Figures of Merit for Receivers 10

CLASSIFICATION AND DESCRIPTION OF TYPES OF MICROWAVE RECEIVERS . . 17

1·5. The Low-level Detector 17
1·6. The Square-law Detector 19
1·7. The Minimum Detectable Signal Power 21
1·8. The Superheterodyne Receiver 24
1·9. The Frequency Converter 26
1·10. The Triode Mixer 28
1·11. The Diode Mixer 32
1·12. The Crystal Mixer 34
1·13. The Local Oscillator 35
1·14. The Reflex Klystron 37
1·15. Radio-frequency Amplifiers 43
1·16. Receivers of Other Types 44

CHAP. 2. CRYSTAL RECTIFIER UNITS 47

2·1. Physical Description of Rectification 48
2·2. High-frequency Effects in Crystal Rectifiers 52
2·3. Figure of Merit of Crystal-video Receivers 54
2·4. The Crystal Converter 56
2·5. Linear-network Representation of the Crystal Converter 59
2·6. The Three-terminal-pair-network Representation 61
2·7. The Relation between the Input Admittance and the Load Admittance 66
2·8. The Dependence of Input Admittance on the I-f Load Admittance 68
2·9. Dependence of the I-f Admittance upon R-f Matching Conditions 71
2·10. Dependence of Conversion Loss on Image-frequency Termination 75
2·11. Measurement, with an Admittance Bridge, of the Dependence of Conversion Loss on the Image Reflection 80
2·12. The Effect of Reflection of the Second Harmonic 83
2·13. The Welded-contact Germanium Crystal 87
2·14. The Converter Noise Temperature 93
2·15. Crystal Burnout 96

2·16. Correlation between TR Leakage Power and Crystal-burnout Power . . . 97

TESTING AND SPECIFICATIONS OF CRYSTALS . . . 100

2·17. Conversion-loss Measurement . . . 101
2·18. Noise-temperature Measurement . . . 105
2·19. Burnout-test Apparatus . . . 111
2·20. The D-c Crystal Checker . . . 113
2·21. Specifications and Relevant Information on Available Types . . . 114

CHAP. 3. SIMPLE MICROWAVE CRYSTAL MIXER CIRCUITS . . . 119

3·1. The Basic Mixer Circuit . . . 120
3·2. The Design of a Crystal Mount . . . 122
3·3. Crystal Mounts for the 3-cm and the 10-cm Bands . . . 124
3·4. The Filter in the I-f Output Lead . . . 128
3·5. Tunable Crystal Mounts . . . 131
3·6. Admittance Scatter in a Mount of Fixed Tuning . . . 134
3·7. Local-oscillator Coupling Mechanisms . . . 136
3·8. Capacitive Local-oscillator Coupling in Coaxial-line Mixers . . . 140
3·9. A Local-oscillator Coupling Circuit for Coaxial-line Mixers . . . 142
3·10. Local-oscillator Coupling in Waveguide Mixers . . . 144
3·11. A Directional Coupler for Coupling the Local Oscillator to the Mixer . . . 146
3·12. A Single Channel for Local-oscillator Coupling . . . 150
3·13. An Exact Equivalent Network for the Coupling Channel . . . 155
3·14. An Iris for Local-oscillator Coupling . . . 160
3·15. Signal-input Circuit . . . 166
3·16. Mounts for 1N26 Crystals and a Waveguide Mixer for the 10-cm Band . . . 171
3·17. Self-protection of the Mixer Crystal . . . 172
3·18. Harmonic Chokes and Shutters . . . 174
3·19. I-f Output Admittance . . . 178
3·20. The Completed Mixer . . . 185

CHAP. 4. MULTIPLE-FUNCTION MIXERS . . . 190

BEACONS AND AUTOMATIC FREQUENCY CONTROL . . . 190

4·1. The Beacon Problem . . . 190
4·2. Single-channel Automatic Frequency Control . . . 191
4·3. Separate-mixer AFC . . . 193
4·4. The Coupling of the Transmitter Sample . . . 196
4·5. Two-channel Mixers for All-waveguide Systems . . . 199
4·6. A Mixer Employing Directional Couplers . . . 201

LOAD-DEPENDENT PROPERTIES OF OSCILLATORS . . . 202

4·7. The Rieke Diagram . . . 203
4·8. Frequency Discontinuities Caused by High-Q Load Circuits . . . 209
4·9. The Design of Load Circuits Containing Transmission Cavities . . . 215
4·10. Load Circuits with Reaction Cavities . . . 218
4·11. The Prevention of Frequency Discontinuities by Padding . . . 219

Examples of Multiple-function Mixers 223

4·12. Provision for Beacon Local Oscillator 223
4·13. R-f Provision for Beacon AFC 227
4·14. Representative Mixers with Multiple Functions 231

Chap. 5. LOCAL-OSCILLATOR NOISE 235

5·1. Generation and Effect of Local-oscillator Noise 235
5·2. Magnitude of Local-oscillator Noise for Typical Tubes 237
5·3. Effect of Local-oscillator Noise on Over-all Noise Figure 239
5·4. Reduction of Local-oscillator Noise by the TR Cavity 241
5·5. Reduction of Local-oscillator Noise by Resonant Filters 243
5·6. Reduction of Local-oscillator Noise by the Use of a Cavity as Part of the Oscillator Tank Circuit 245
5·7. Effect of D-c Bias on the Mixer Crystal 249
5·8. Results of Experiments on the Effect of D-c Bias 251

Chap. 6. BALANCED MIXERS 257

6·1. Simple Microwave Balanced Mixer 257
6·2. General Properties of the Magic T 259
6·3. The Matching of the Magic T 262
6·4. Description of the Magic T in Terms of Voltages and Currents . 264
6·5. The Magic-T Balanced Mixer 269
6·6. Additional Features of the Magic-T Balanced Mixer 275
6·7. Special Crystal Mounts for the Balanced Mixer 279
6·8. A Double Balanced Mixer for Separate-channel AFC 283
6·9. Other Special Circuits 287

Chap. 7. FREQUENCY CONTROL OF LOCAL OSCILLATORS 290

7·1. Sources of Frequency Drift 290
7·2. Properties of Local Oscillators for Frequency Control 292
7·3. Classification of AFC Systems 294

Difference-frequency Systems 295

7·4. The AFC Feedback Loop 295
7·5. The Transmitter Sample 296
7·6. Mixers, Local Oscillators, and I-f Amplifiers 299
7·7. Discriminators 302
7·8. Discriminator Theory 308

Nonhunting Systems 312

7·9. Control Circuits for Nonhunting Systems 312

Drift-in Hunting System 314

7·10. Basic Theory 314
7·11. Standard Gas-discharge-tube AFC 315
7·12. Design Theory for Gas-discharge-tube Control Circuits 317
7·13. Diode-transitron Control Circuits 326

Thermal Hunting Systems 331

7·14. Background and Basic Theory 331

7·15. The Whitford AFC 333
7·16. Nibbe-Durand AFC System 337

ABSOLUTE-FREQUENCY HUNTING SYSTEMS 341

7·17. The Beacon Problem 341
7·18. Reflector-modulation Schemes for Reflector AFC 342
7·19. Beacon AFC for Thermally Tuned Tubes 347

CHAP. 8. SPECIAL MEASUREMENT TECHNIQUES 352

8·1. Production Tests for Losses of Signal Power 352
8·2. Local-oscillator Coupling 354
8·3. Over-all Noise-figure Measurements 356
8·4. Radio-frequency Noise Generators 361
8·5. Apparatus for Measurement of the Effect of Image Reflection . . 364
8·6. An Apparatus for Measurement of the Admittance Loss of a Mixer 367
8·7. Tests of the AFC Mixer 372

INDEX 375

CHAPTER 1

INTRODUCTION

The term "receiver" is customarily applied to an entire device which, when connected to a source of radio-wave energy, converts the information conveyed by the radio wave into a form in which it is directly usable. By this understanding, a conventional radio broadcast receiver includes everything from the antenna to the loudspeaker. In a television receiver, the information is presented on a cathode-ray tube; in facsimile transmission, the receiver supplies energizing voltages to a suitable reproducing device. It is conventional to discuss the design of such a receiver as a completely unified system, because similar techniques and components are used throughout the receiver.

The problem of design of receivers for microwaves, however, falls more naturally into two subdivisions: first, the design of components involving microwave techniques, and, second, the design of those involving more conventional, low-frequency techniques. Because these two categories of components are so widely different in nature, it has been thought advisable to treat these two aspects of microwave receiver design in separate volumes of this series, with the present volume restricted in scope to those components that involve microwave techniques. Volume 23 of this series covers the details of assembly of the microwave and low-frequency components into a complete receiver unit for use in specific microwave radio systems. In addition, the details of amplifier design are covered in Vol. 18 of this series. The scope of the present volume will include a discussion of those components of a microwave receiver which involve microwave energy.

If a transmission system from a receiving antenna is connected to the input terminals of an assembly of these microwave components, energy in a form to be treated with lower-frequency techniques is derived from the output terminals. There are many different ways in which such an assembly of components can be made, the choice being dependent upon the particular requirements that the receiver must satisfy. Since the experience upon which this volume is based is largely with receivers specifically designed for radar, by the Radiation Laboratory in conjunction with outside companies, the emphasis will be rather heavily weighted toward the design of microwave components for this service. It is hoped, however, that the information will be found of value to those interested in the design of microwave receivers for other applications.

1·1. Definition of Terms.—Before proceeding with a discussion of the properties of microwave receivers, it will be well to make specific statements as to the meaning of certain terms that will be used frequently in the following sections. Most of these terms are in common usage in radio practice, but they will be defined more generally here, in some cases, to make their application to microwave devices apparent. In other cases, a confusion exists in the meaning of terms, and their usage in the following sections will be clarified by these definitions.

The conventional meaning of the term *receiver* has already been discussed and this meaning will be used throughout the present volume. The classification may be begun by analogy to low-frequency techniques, and by the definition of those terms which have relevance to the present work. A conventional radio receiver usually begins with a radio-frequency amplifier. This term, abbreviated "r-f amplifier," will be used to denote a device that reproduces at its output terminals a signal having the same frequency and modulation components as those impressed upon its input terminals, but at a higher power level. The r-f amplifier must be operative directly for signals at the frequency of the received wave, which means, for the present discussion, that it must be a microwave device.

It will frequently be necessary to use the concept of "bandwidth" in the following sections. In a qualitative sense, this term will be used to mean the extent of the range of frequencies within which the particular device in question has a relatively uniform amplitude-response characteristic. The exact amount by which the amplitude response may vary within this band will be defined in a manner which depends upon the device in question. An exact definition of "noise bandwidth" will be given in a later section of this chapter dealing with figures of merit for receivers.

By the "tuning range" of a component will be meant the extent of the range of frequencies to which the component can be adjusted with uniform response. The question of tolerances arises in this connection and the specification of tolerances will be discussed when particular devices are described. If a component is tuned to a frequency within its tuning range, the magnitude of its response and its bandwidth should be substantially independent of that tuning.

Any microwave circuit which, unless it is retuned, restricts the tuning range of the receiver to a range less than that of most microwave circuits will be considered as a preselecting circuit. A tuned r-f amplifier would thus be a preselector—a concept which is in agreement with common usage at low frequencies. Also under this definition would be included any selective filter in the microwave section of the receiver which must be tuned as a part of the tuning procedure for changing the frequency setting of the receiver.

In conventional radio practice, the superheterodyne receiver is the most widely used and most flexible type of receiver. A fundamental group of components used in a receiver of this type is the group making up the frequency converter, often called simply the "converter." This group of circuits can be defined as one that has the property of giving, at its output terminals, a signal containing the same phase and amplitude relationships among its components as those found in the signal impressed upon its input terminals, but having a center frequency differing from that of the input signal. As usually employed in a superheterodyne receiver, the converter changes the frequency of signals from the radio frequency derived from the antenna into a lower, or intermediate, frequency. In some applications, however, it is desirable to use a converter that increases the signal frequency. The bandwidth of a converter specifies the range of frequencies at the input terminals which will be converted into the same range at a different center frequency at the output terminals.

The most common converter is one that combines a wave from a local oscillator with the signal wave in a "mixer" circuit. Because the component derived from the mixer is usually the difference, or beat, frequency between the signal and the local oscillator, an oscillator so used is often called a beating oscillator. In low-frequency practice, a tube containing elements that, when associated with the proper circuits, can be used as a mixer, as well as elements that can be used to form the beating oscillator, is termed a converter tube. A tube that does not contain elements to form a beating oscillator, but that does contain separate elements for the injection of signal voltages and for the injection of local-oscillator voltage, is called a mixer tube. Often, the two sets of voltages are injected on a single element after their superposition has occurred in a common circuit. The tube may then be considered as a detector, and for this reason the term "first detector" is often applied to this part of a superheterodyne receiver.

A "detector" will be defined, therefore, as a device that produces in its output circuit a voltage that has a-c components derived from amplitude-modulation components of the wave, or superposition of waves, at its input terminals. In addition, there is a d-c component of the voltage at its output terminals which depends upon the averaged amplitude of the superposed waves at the input terminals. When a detector of this sort is used as a part of a mixer, only the a-c components in the desired frequency range are utilized. Since a detector usually consists of a device in which the currents induced are not linearly related to the exciting voltages, components of many other frequencies are also generated, but these are not utilized. It is for this reason, however, that the element that functions as a detector can also be used as a harmonic

generator, since both functions are the result of its nonlinearity. A detector is used directly as a receiving element in nonsuperheterodyne receivers in which the incoming wave is converted directly from a microwave signal to a voltage containing only the modulation components.

1·2. Effect of Type of Signal on Receiver Design.—The great majority of receivers for microwaves in present use are designed for the reception of signals consisting of pulses of short time duration. In applications such as pulse radar, the pulses are usually not longer than a few microseconds (10^{-6} second) and in some cases are as short as one-tenth microsecond. An understanding of the factors that enter into the design of receivers for short pulses may be gained from the consideration of a single pulse of microwave energy, as shown in Fig. 1·1.

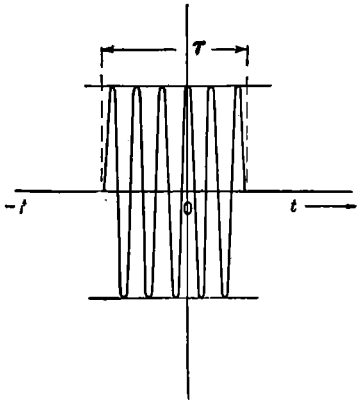

FIG. 1·1.—Graphical representation of a rectangular r-f pulse.

If the amplitude of the pulse is taken as unity and its time duration as τ, the pulse amplitude can be described as a time function which is zero for $|t| > \tau/2$ and is equal to $\cos(\omega_0 t + \phi)$ for $|t| < \tau/2$, where ω_0 is 2π times the frequency of a continuous-wave signal that has been turned on at $t = -\tau/2$ and off at $t = \tau/2$. The term ϕ is an arbitrary phase factor included for generality. The Fourier transform, $g(\omega)$, for such a function is given by

$$g(\omega) = \frac{1}{\sqrt{2\pi}} \int_{-\frac{\tau}{2}}^{\frac{\tau}{2}} \cos(\omega_0 x + \phi) e^{-j\omega x}\, dx. \tag{1}$$

The limits of integration are $-\tau/2$ and $+\tau/2$ because the time function is zero everywhere outside this range. The result of performing the integration is

$$g(\omega) = \frac{1}{\sqrt{2\pi}} \left[\frac{e^{j\phi} \sin(\omega - \omega_0)\frac{\tau}{2}}{\omega - \omega_0} + \frac{e^{-j\phi} \sin(\omega + \omega_0)\frac{\tau}{2}}{\omega + \omega_0} \right], \tag{2}$$

which shows that the postulated pulse or wave train contains frequency components extending infinitely far in both directions from $\omega_0/2\pi$. If the carrier frequency, $\omega_0/2\pi$, is large compared with $1/\tau$, the second term in Eq. (2) is negligible, and the frequency components have amplitudes as shown in Fig. 1·2.

The response of a receiver to a pulse of this sort obviously depends upon the bandwidth of the receiver. A detailed discussion of this dependence is outside the scope of this volume. Suffice it to say that, usually, the optimum bandwidth is approximately the width of the principal maximum of the frequency spectrum. The best width and shape for the bandpass characteristic of the receiver depend primarily upon the degree of fidelity with which the pulse must pass through the receiver and the sensitivity requirements that must be met. In any case, most of the energy in the pulse is contained in the principal maximum. In order to receive most of the energy carried in pulses from 0.1 to 1.0 μsec in duration, the receiver bandwidths required are 20 to 2 Mc/sec.

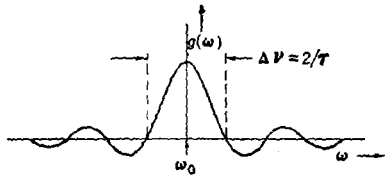

FIG. 1·2.—Fourier frequency transform of a rectangular r-f pulse.

The effect of this requirement on the design of the microwave components must now be considered. Because the carrier frequencies concerned are usually from 3000 Mc/sec upward, it is apparent that a microwave component must have a loaded Q of 100 to 1000, for the bandwidths stated, before it begins to affect the receiver bandwidth. Circuits as sharply resonant as this are rarely encountered, and the bandwidth requirement for the microwave components is therefore seldom difficult to meet. On the other hand, it is relatively simple to achieve resonant circuits that are sufficiently sharp to obtain a certain degree of preselection, if desired. The bandwidth requirement affects the microwave receiver because it is so small rather than because it is large. For a bandwidth of 2 Mc/sec, the receiver must remain stable in frequency to 2 Mc/sec in at least 3000—and perhaps as many as 30,000—Mc/sec. Thus a frequency stability of 1 part in 15,000 may be required. This would correspond to maintaining an ordinary broadcast receiver to within 50 cps at a receiving frequency of 750 kc sec. which requires some care. For this reason, automatic frequency control has become a standard part of almost all microwave receivers, and thus provision for it is an important factor in the design of microwave components.

In receivers for radar service, the automatic frequency control is so arranged that the receiver is maintained at the local transmitting frequency, although this frequency may vary. Hence, in the following chapters, great emphasis will be placed on the various methods by which automatic frequency control of this kind can be achieved. There will also be a discussion of the various techniques that have been devised for absolute frequency control for receiver bandwidths of this order. An exception to the policy of excluding the discussions of low-frequency

circuits from this volume is made in the case of automatic frequency control. The low-frequency circuits used as a part of the frequency-control schemes are discussed in Chap. 7. The reason for including this discussion is that frequency control and stability are fundamentally connected with microwave oscillators and for that reason may be considered a part of a microwave component.

If microwave frequencies are ever to be used for transmission and reception of ordinary audio-frequency signals, and, therefore, conventional audio-frequency receiver bandwidths are desired, the frequency-stability problem will become of prime importance. It may then be necessary to maintain a receiver at an absolute frequency within 1 part in 10^6 or more. For this service, an entirely different approach to frequency control is required, and a certain amount of work in this direction has been done. Circuits developed for such purposes are fully discussed in Vol. 11 of this series because their major application, so far, has been in special laboratory equipment.

Because most of the receiver components discussed in this volume were designed to operate in pulse radar, the effect of a "duplexing system" on their design will be prominent. A *duplexing system* includes those parts of a radar set which make possible the use of a common antenna for transmission of large signals and reception of weak signals at different times. Such a system makes use of the fact that the amounts of transmitted and received power are of very different orders of magnitude, to facilitate the flow of transmitted power to the antenna and not into the receiver, and the flow of received power into the receiver circuit. Because these duplexing components are of very great importance in the design of modern radar, and because an exposition of the problems and design of the many types that have been developed is a large task in itself, only a rudimentary discussion of their functions and general nature will be given here. For a complete discussion of this subject the reader is referred to Vol. 14 of this series where it is treated in detail. Because duplexing systems have had so great an influence upon the design of the microwave receiving components, however, it will be necessary to give a qualitative description of some of the more important types.

1·3. Qualitative Discussion of Duplexing Components.—As stated in the previous section, the duplexer components form a unit that makes possible the use of a common antenna for transmission and reception. In pulse radar this is done by making use of the fact that transmission and reception are accomplished at different times and at different power levels. The great majority of the receiving components to be described have been designed to work with duplexers of this kind, but it might be well to digress for a moment to add a few words about the more general

class of duplexers with which transmission and reception may be accomplished simultaneously.

It is not the task of the present volume to discuss the desirability of common transmitting and receiving antennas, for this is certainly a question that must be decided for a particular system. At microwave frequencies, small but highly directive scanning antennas are usually employed and the exact alignment of two such antennas is not easy to maintain. In addition, the usual desire is for maximum directivity compatible with the available space, and, therefore, a single large antenna is more desirable than two antennas of half the area each. The further fact that this single antenna has twice the gain of the two smaller ones for both transmitting and receiving, makes the use of a duplexer, even with the loss of some transmitted and received power, definitely advantageous.

A box representing a generalized duplexer is shown in Fig. 1·3. The box has three pairs of terminals. One of these pairs is to be connected to the antenna, one to the receiver, and one to the transmitter. For the best duplexing action the product of the available transmitted power sent to the antenna and the available received signal power delivered to the receiver should be as large as possible and none of the transmitter power should be coupled into the receiver. It can be shown that if the duplexer contains only linear circuit elements and if the received and transmitted frequencies are identical, the maximum value this product can have is 0.25. For example, if one-half the available transmitter power is radiated by the antenna, not more than one-half the available received signal power can be delivered to the receiver. This loss just compensates for the gain obtained through the use of a single antenna instead of two, each one-half the radiating area. Duplexers of this kind can be made up from such bridge circuits as the "magic T" and its equivalent circuits, described in Sec. 6·2.

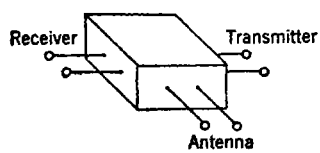

FIG. 1·3.—Generalized representation of a duplexer.

A duplexer for a radar system is different from this, in that simultaneous transmission and reception are not required. In a radar system, the transmitted power is very high, and the prime requirement of the duplexer is that it protect the sensitive elements of the receiver from damage by this power. Because of the extremely fragile nature of the best receiver elements, great effort must be made to achieve adequate protection. An attenuation from 70 to 80 db is needed between the transmitter and receiver when the transmitter is actuated. This attenuation is realized through the use of a resonant chamber filled with an appropriate gas at low pressure. The resonant chamber is so designed

that a narrow gap exists between two posts. In the gap, the electric field is built up to a value considerably greater than that in the normal transmission line. If the field at this gap is less than sufficient to break down the gas by ionization effects, the resonator transmits an incident wave at its resonant frequency with little attenuation. Because the resonant frequency is adjusted to be that of the received signal, the cavity acts as little more than a preselection circuit for the receiver. The resonator is sometimes made up of a combination of several individual resonators and corresponds to a multituned circuit passing a wide band of

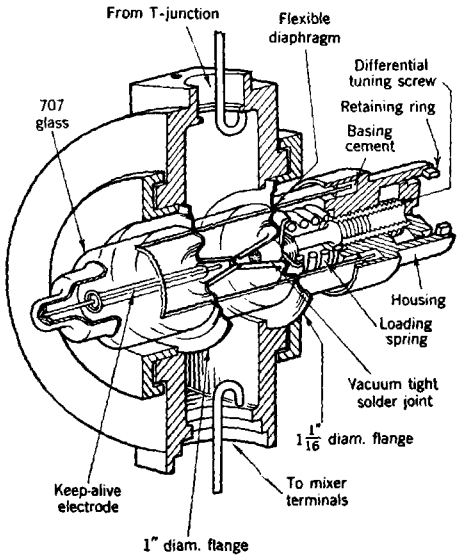

FIG. 1·4.—Cross-sectional view of a 1B27 TR switch.

received frequencies. In this case, even its preselection action may be negligible.

At the level of the transmitted power, the field in the gap of the resonator far exceeds that necessary to produce electrical breakdown, and an arc is therefore maintained at the gap for the duration of the transmission period. The principal field in the resonator at this time is that necessary to sustain the arc; thus, if the output coupling of the resonator to the receiver is sufficiently small, insufficient power is coupled into the receiver to damage it. Because the voltage required to strike the arc is always greater than that needed to sustain it, a somewhat higher power is transmitted for a very short time at the beginning of each transmission period. This power is called the "spike" power and has been found to be the part most likely to damage the receiver. Such

a resonator is called a TR switch, because of its function as a self-actuating transmit and receive switch. The design of this switch always involves a compromise between the leakage power that reaches the receiver during transmission and the attenuation suffered during reception. For a detailed discussion of this problem and for details of the design and gas content of the resonator, the reader is referred to Vol. 14 of this series. Fig. 1·4 shows a cutaway perspective view of a resonator commonly used as a TR switch.

When the arc of the TR switch is firing, a wave incident at the input side of the TR cavity is almost completely reflected. The cavity may therefore be placed in a side arm, as a T-connection to the main line that connects the transmitter to the antenna. The phase of the reflection coefficient is such, with an iris-coupled cavity, that it is equivalent to a short circuit in the plane of the input iris. To obtain transmission of the transmitter signal past the junction without reflection, the length of line from the wall of the waveguide to the input iris is chosen to be approximately an integral number of half wavelengths. For coverage of a wide frequency band, the cavity is mounted with its input iris in the wall of the main waveguide. With a loop-coupled TR switch the phase of the reflection coefficient is determined by experiment, and the cavity is connected in such a way as to act as a short circuit at the end of a stub line, an odd number of quarter wavelengths in equivalent length, on the side of the main coaxial line.

During reception, the duplexer must also ensure that almost all of the available received signal power is transmitted through theTR cavity into the receiver. The transmitter, when not oscillating, has a resonant frequency differing from its oscillation frequency, and it therefore reflects, almost completely, a received signal wave arriving through the line from the antenna. The line length between the transmitting oscillator and the side branch that contains the TR cavity and receiver can be chosen in such a way that waves traveling along the line from the antenna are transmitted into the TR cavity and receiver without serious reflection or absorption due to the presence of the piece of line terminating in the transmitter. For coaxial lines, the piece of line between the T-junction branch and the transmitter is equivalent to a short-circuited stub line, an odd number of quarter wavelengths in length, such as is used for a right-angle stub support. In early radar equipment this line length was made variable to allow proper adjustment for the particular transmitter tube in use. Later, it was found that a fixed length gives sufficiently good results for all transmitter tubes in a small frequency band. To ensure this, a specification test of the "cold impedance" of transmitter tubes intended for use with systems having a fixed distance between the TR cavity and the transmitter was set up.

An improved method for ensuring transmission of received signals to the receiver, is one that utilizes a second gas-filled cavity resonator, called an anti-TR or RT switch. This switch is so placed on a stub line, or in the wall of the main line between the transmitter and the branch leading to the TR switch that, when an arc is struck in its gap, during transmission periods, it causes little reflection of the transmitter wave. The cavity is tuned to resonate at the transmitter frequency and it is tightly coupled to the input line. As a result a large standing-wave ratio for low-level signals is produced in the main line between the branch containing the TR switch and the branch containing the anti-TR switch. The spacing between these two branches is chosen in such a way that received signal power is coupled into the receiver with little reflection or absorption due to the line terminating in the transmitter, regardless of the cold impedance of the transmitter.

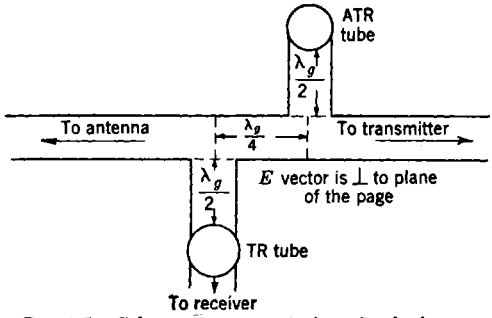

FIG. 1·5.—Schematic representation of a duplexer.

A sketch of the relevant parts of a typical duplexer is given in Fig. 1·5 where the dimensions shown refer to equivalent electrical lengths. This is an example of only one of many forms in which duplexers have been made. For a thorough treatment of the subjects of TR switches, anti-TR switches, and complete duplexers, the reader is referred to Vol. 14 of this series.

1·4. Figures of Merit for Receivers.—At low frequencies, the sensitivity of a receiver can be specified in various ways. Since atmospheric and man-made static is almost always present to some degree, the useful sensitivity is usually considerably below any limits imposed by purely physical or thermodynamical considerations. At microwave frequencies, such static is almost completely absent and the minimum detectable signal is determined almost completely by the masking effect of random noise. Such noise is developed because electric currents are not steady, but are made up of the flow of large numbers of electrons. Thermal agitation of the particles in a resistor gives rise to a random noise voltage across the terminals of the resistor. For this reason, the quantity called

the "noise figure" has become the figure of merit for microwave receivers, and design considerations that affect the noise figure of the receiver are of the first importance if the detection of the smallest possible signal strength is a prime requirement.

Within any electronic circuit there exist sources of noise in the form of small potentials developed by thermally excited fluctuation of electrons in the circuit elements. This thermal-agitation noise has been studied by many people and is often called "Johnson noise" after J. B. Johnson,[1] one of the first to study the phenomenon. It has been shown that the mean square of the noise voltages in the frequency range ν_1 to ν_2, developed by a circuit element because of thermal agitation, is given by

$$\overline{E^2} = 4kT \int_{\nu_1}^{\nu_2} R \, d\nu, \tag{3}$$

where k is Boltzmann's constant, T is the absolute temperature of the circuit element in degrees Kelvin, R is the resistive component of the impedance of the circuit element, and ν is the frequency of the noise-voltage component. For an interval of frequencies so small that R may be regarded as constant, Eq. (3) becomes

$$\overline{E^2} = 4kTR \, d\nu. \tag{4}$$

Any network made up of linear passive circuit elements such as resistors, condensers, and inductances, or their microwave equivalents, may be considered as a noise-voltage generator with an open-circuit mean-square noise voltage given by Eq. (4) in the narrow frequency band $d\nu$, where R is the resistive part of the impedance measured across the terminals of the network. Since the power available from such a generator is

$$P = \frac{\overline{E^2}}{4R}, \tag{5}$$

the available noise power in the frequency band $d\nu$ is

$$dP = kT \, d\nu. \tag{6}$$

For a linear four-terminal network with a signal generator connected to the input pair of terminals, a gain G may be defined. The network may be considered as a new source of the signal developed in the signal generator, and it will deliver maximum power when the output load has an impedance that is the complex conjugate of that measured across the out-

[1] J. B. Johnson, "Thermal Agitation of Electricity in Conductors," *Phys. Rev.*, **32**, 97 (1928); H. Nyquist, "Thermal Agitation of Electronic Charge in Conductors," *Phys. Rev.*, **32**, 110 (1928), J. B. Johnson and F. B. Llewellyn, "Limits to Amplification," *Elect. Engng., N.Y.*, **53**, 1449 (1934); F. C. Williams, "Thermal Fluctuations in Complex Networks," Wireless Section, I.E.E., **13**, p. 53, March 1938.

put terminals of the network. If S_0 and S are the available powers from the network and from the signal generator, respectively, the gain of the signal-generator-network combination is defined as

$$G = \frac{S_0}{S}. \tag{7}$$

This definition says nothing about the impedance match between the signal generator and the network; in fact, the value of G depends upon the impedance of the signal generator as well as on the network. It is a maximum when the impedance of the signal generator is the complex conjugate of the impedance measured across the input terminals of the network, when the output terminals of the network are connected to a load having an impedance equal to the complex conjugate of that at the output terminals.

Associated with the output impedance of the signal generator, there will be thermal-agitation noise, as discussed earlier in this section, the available noise power being given by Eq. (6). From the four-terminal network there will also be an available noise power in the frequency band $d\nu$. If dN is the noise power available from the signal generator, and dN_0 is the noise power available from the output terminals of the network, it is found that

$$\frac{dN_0}{S_0} = \frac{F\,dN}{S}, \tag{8}$$

where F is equal to, or often greater than unity. The quantity F is called the "noise figure" of the network and is a measure of the signal-power loss in the network, as well as of the detrimental effects of additional thermal-agitation noise, vacuum-tube noise, and noise from other sources added to the signal within the network. This quantity is thus the figure of merit for a receiver. For a perfect receiver, F is equal to unity, which means that a signal arriving at the output terminals is masked by noise no more nor less than it was as delivered from the antenna. The noise power available from the antenna of a receiver may be regarded as being developed in the radiation resistance of the antenna. As a consequence, its magnitude depends upon the temperature of the region of space from which the antenna receives radiation. Since receiver noise figures are usually considerably greater than unity, however, the part of the output noise power of the receiver which arises from the antenna resistance is small for an apparent antenna temperature near room temperature. R. H. Dicke[1] has designed an ingenious device that measures very precisely the apparent temperature of the resistance of a

[1] R. H. Dicke, "The Measurement of Thermal Radiation at Microwave Frequencies," RL Report No. 787, Aug. 22, 1945.

receiving antenna, as a means for measuring the attenuation of microwave frequencies in the atmosphere. The noise figures of receivers are usually defined for an antenna resistance assumed to be at room temperature.

A combination of Eqs. (6), (7), and (8) leads to the result

$$dN_0 = FGkT_0\,d\nu. \tag{9}$$

Both the quantities F and G depend upon the impedance of the signal generator, but in general, the impedance that gives minimum noise figure is different from the impedance that results in maximum gain. Because the noise figure is the important quantity, receiver design should always be such as to minimize it, even at the expense of gain, for the gain can be increased easily at high level where any noise power introduced is negligible.

In general, the noise figure is a function of frequency. An "effective" noise figure for the system may be defined in the following way. The output power from the network is read on a meter. We define G_0 as the product of the gain of the network and the fraction of the available power from the network delivered to the output meter. Power is delivered to the output meter only when the power available from the network exceeds thermal-agitation noise, if the network and the meter are at the same temperature, for otherwise the transfer of energy from one body to another at a higher temperature would be implied. The noise power delivered to the output meter is

$$N_0 = kT_0 \int_0^\infty FG_0\,d\nu. \tag{10}$$

The use of the gain G_0 instead of G makes the integral convergent. As can be seen from Eq. (9), the product FG must be equal to or greater than unity at all frequencies since, from Eq. (6), dN_0 must be at least as great as $kT_0\,d\nu$.

If F were unity at all frequencies the output noise from the network would be

$$N_0' = kT_0 \int_0^\infty G_0\,d\nu. \tag{11}$$

The effective noise figure F^* for the network is then defined by Eq. (12),

$$F^* = \frac{N_0}{N_0'} = \frac{\int_0^\infty FG_0\,d\nu}{\int_0^\infty G_0\,d\nu}. \tag{12}$$

An effective noise bandwidth B may be defined, for the combination, as

$$B = \frac{\int_0^\infty G_0 \, d\nu}{G_{0\,\max}}, \tag{13}$$

where $G_{0\,\max}$ is the maximum value of the gain with respect to frequency. The effective noise figure, from Eqs. (10), (12), and (13), is then

$$F^* = \frac{N_0}{kT_0 B G_{0\,\max}}. \tag{14}$$

This noise figure can be measured by determining N_0, $G_{0\,\max}$, and B. The quantity B may be considered as the bandwidth of an equivalent circuit having a constant gain equal to $G_{0\,\max}$ within the band and zero gain outside the band. This bandwidth can be calculated for bandpass circuits of many types if the bandwidth between the points at which

$$G_0 = \frac{G_{0\,\max}}{2}$$

is measured and the type of circuit is known.

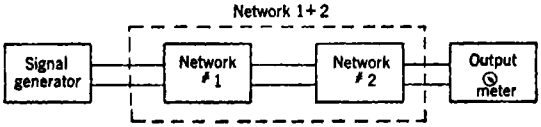

FIG. 1·6.—Block diagram of cascaded networks.

It is often necessary to use two or more networks with noise figures greater than unity, in cascade. To discover how the noise figure of the combination depends upon the noise figures of the individual networks, we may consider a situation such as that shown in Fig. 1·6. A signal generator is connected to network 1, this in turn connects to network 2, which finally connects to the output meter. Networks 1 and 2 can be treated as a single network, (1 + 2). From Eq. (9),

$$dN_{0(1+2)} = F_{(1+2)} G_{(1+2)} kT_0 \, d\nu \tag{15}$$

where the quantities are all the same as before except that they refer to the combined network (1 + 2). The gain of the combination $G_{(1+2)}$ must be equal to the product of the individual gains G_1 and G_2, where G_2 depends upon the output impedance of network 1, in accordance with the definition of gain, Eq. (7). Therefore,

$$dN_{0(1+2)} = F_{(1+2)} G_1 G_2 kT_0 \, d\nu. \tag{16}$$

The available noise power from network 1 is

$$dN_{01} = F_1 G_1 kT_0 \, d\nu,$$

whereas that part of the available noise power from network 2 caused by noise output from network 1 is just

$$dN'_{0(1+2)} = dN_{01}G_2 = F_1G_1G_2kT_0\,d\nu. \tag{17}$$

The part of the available output noise power from network 2 which arises in network 2 and in the output impedance of network 1 is

$$dN_{02} = F_2G_2kT_0\,d\nu. \tag{18}$$

The part of this originating in network 2 is

$$dN''_{0(1+2)} = dN_{02} - G_2kT_0\,d\nu, \tag{19}$$

since the contribution resulting from thermal noise available in the output impedance of network 1 is $kT_0\,d\nu$ times the gain of network 2. These noise components are added and subtracted directly as power because they are completely random and therefore can have no phase coherence. The total noise output $dN_{0(1+2)}$ from the combination must be the sum

$$dN_{0(1+2)} = dN'_{0(1+2)} + dN''_{0(1+2)}. \tag{20}$$

Putting Eqs. (17), (18), and (19) into Eq. (20) we have

$$dN_{0(1+2)} = F_1G_1G_2kT_0\,d\nu + F_2G_2kT_0\,d\nu - G_2kT_0\,d\nu.$$

From this and Eq. (16), an expression is obtained for the over-all noise figure in the narrow frequency range $d\nu$ given by

$$F_{(1+2)} = F_1 + \frac{F_2 - 1}{G_1} \tag{21}$$

Again, by use of the concept of the gain of network 2 associated with an output meter G_{02}, so that the integrals may exist, an expression analogous to Eq. (14), for the effective over-all noise figure, is

$$F^*_{(1+2)} = \frac{\displaystyle\int_0^\infty [G_1G_{02}F_1 + G_{02}(F_2 - 1)]\,d\nu}{\displaystyle\int_0^\infty G_1G_{02}\,d\nu} \tag{22}$$

If the network 1 is very wideband compared with the combination of network 2 and the output meter, and G_1 and F_1 may therefore be regarded as constants in the above integrals, then

$$F^*_{(1+2)} = F_1 + \frac{F^*_{2-1}}{G_1}, \tag{23}$$

where F_2^* is defined by Eq. (12). Equation (23) suggests the possibility of setting up apparatus to measure the noise figure of a single network used as network 1 in the combination. To do this a measurement of

$F^*_{(1+2)}$ and of G_1 must be made for the network in question in the apparatus so that, if F_2^* is known by a previous measurement, F_1 may be calculated. Since F_2^* will be a function of the output impedance of network 1, this function and the output impedance of network 1, under the conditions of the experiment, must be known or measured.

To facilitate the calculation of over-all noise figures and the measurement of pertinent parameters for devices that can be simulated by linear passive networks, the concept of "noise temperature" has come into use. The noise temperature of a device is independent of the gain of the device, and is directly a measure of the noisiness of the network compared with a simple resistance. The noise temperature is defined as the ratio of the noise power available from the network to that available from a resistor at room temperature. It was shown by Eq. (9) that the available noise power in a frequency band $d\nu$ is

$$dN_{01} = F_1 G_1 k T_0 \, d\nu.$$

The same quantity for a resistor is

$$dN_0 = kT_0 \, d\nu, \tag{24}$$

and the ratio $dN_{01}/dN_0 = t$, becomes

$$t = F_1 G_1. \tag{25}$$

By substitution of this expression into Eq. (23),

$$F^*_{(1+2)} = \frac{t + F_2^* - 1}{G_1}. \tag{26}$$

The noise temperature of a network may be measured by simply comparing its noise output power with that of a resistor. The gain of the network may then be measured at a much higher signal level, provided the network is the same for a signal at this level as for noise, and these two quantities together will then be the figure of merit for the device. The effective over-all noise figure for a combination may then be computed from Eq. (26), provided the output impedance of the first network, and F_2^* for the second network corresponding to this impedance, are known.

An expression of the form of Eq. (23) may be derived in an analogous manner for more than two networks in cascade. Because the noise figure and gain of each network are functions of frequency (as is also the noise temperature), an expression for the over-all noise figure of a combination can be expressed only as an integral. In practice, however, one of the circuits very often has a pass band much narrower than that of the others, and an expression similar to Eqs. (23) or (26) is useful. Microwave receiving components very often have pass bands 10 per cent or more in width, whereas the pass band of the entire receiver is about

0.01 per cent; therefore Eqs. (23) and (26) are useful. If all but the last of n networks in cascade have pass bands wide compared with that of the last network, their gains and noise figures may be regarded as constants in integrals similar to those in Eq. (22). The effective over-all noise figure for the combination may then be written

$$F^*_{(1+2+\ldots+n)} = F_1 + \frac{F_2 - 1}{\Gamma_2} + \cdots + \frac{F_{n-1} - 1}{\Gamma_{n-1}} + \frac{F^*_n - 1}{\Gamma_n}, \quad (27)$$

where

$$\Gamma_p = \prod_1^{p-1} G_i.$$

Because of the appearance of the gain factors in the denominators of these successive terms, it is clear that in a receiver, the contribution to the effective over-all noise figure from stages occurring after a reasonable gain has been achieved is negligible. Another way of saying this is simply that the noise contribution of the early stages, because it is amplified, masks any contributions to the total output noise which might be made by later stages. It is clear, then, that the microwave components, since they must necessarily be the first in any cascade of circuits making up a microwave receiver, play the dominating role in determining the figure of merit for the receiver.

CLASSIFICATION AND DESCRIPTION OF TYPES OF MICROWAVE RECEIVERS

1·5. The Low-level Detector.—The simplest kind of receiver at any frequency consists of a detector followed by an amplifier, as indicated in Fig. 1·7. At microwave frequencies, the detector for such a receiver must respond directly to the microwave energy. The detector produces, at its output terminals, voltages derived from amplitude-modulation components in the envelope of the radio-frequency waves impressed upon its input terminals. All of the amplification in such a receiver occurs at the modulation frequency. A receiver of this kind responds to signals having carrier frequencies anywhere in the pass band of the r-f components, including the detector. The ability to reproduce modulation voltages is determined primarily by the characteristics of the detector and modulation-frequency amplifier, since the pass band of the other r-f components is usually wide compared with the frequency spectrum of the received signal.

A number of devices may be used as detectors for a receiver of this kind. Because they must respond directly to the microwave signal, however, only special kinds of vacuum tubes, in which the interelectrode spacings are very small, are useful. Transit-time effects make ordinary

vacuum tubes almost completely unresponsive. In addition, such vacuum tubes must be built in a form that enables them to become integral parts of the circuits associated with them. There exist a few tubes that meet these requirements—the GE "lighthouse" and "oilcan" diodes and triodes for example. Such tubes, however, even with their small, but not negligible, interelectrode spacings, are useful only in the low-frequency part of the microwave region, principally above 10 cm. The design of circuits for the use of these tubes is too strongly dependent on the specific nature of the tube available to be described here. The primary problem associated with the design of detectors using these tubes is the matching of the signal energy available from the antenna into the r-f input circuit. This problem can be solved by the use of standard microwave techniques, and circuits for this purpose will be found in literature dealing specifically with such tubes. A tube intended for use at microwave frequencies is so designed that it may be used as an integral

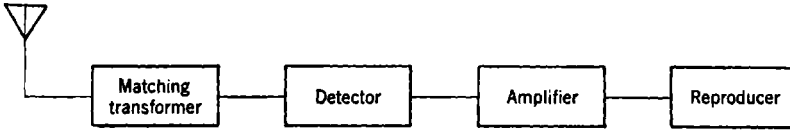

FIG. 1·7.—Block diagram of receiver with low-level detector.

part of the microwave circuit. In the lower-frequency part of the microwave region, only diodes are used as detectors; in the higher-frequency part of the region (10,000 Mc/sec and above), no satisfactory diodes exist. The diode is not the most satisfactory detector for most purposes, and is widely used only in applications where its ability to withstand high-power signals without damage is an important property.

A detector for microwave signals can be made from one of several devices that change in electrical resistance when heated by incident microwave energy. One such device is a Wollaston wire. An ordinary 5- or 10-ma Littelfuse contains such an element and can therefore be used as a detector. Another device of this sort is the thermistor, which also suffers a change in resistance when heated by microwave energy. The thermistor has a negative temperature coefficient of resistance, whereas the fuse wire has a positive coefficient. Either of these devices may be arranged in a circuit with an r-f matching transformer, in such a way as to absorb signal energy from an antenna. A steady current is passed through the fuse or thermistor, and incident r-f energy causes a change in the voltage produced across the element.

The use of a detector of this kind is restricted primarily to laboratory equipment. Its power sensitivity and noise figure are not so good as those of some other devices, and it cannot be used to detect modulation

frequencies above a few thousand cycles per second because the thermal time constant limits the rate at which it can respond. Detectors of this kind are widely used in test equipment, however, because they are easily procured and have some convenient properties. Because these detectors are capable of absolute calibration when used as bolometers in bridge circuits, they are most frequently used in low-level power-measuring equipment. A discussion of these applications is outside the scope of this volume, and is to be found in Vol. 11 of this series.

A sensitive detector for microwave power is the very highly developed microwave version of the familiar crystal detector. Crystal detectors were early recognized as being especially suited to microwave circuits because of their extremely small physical size. A large amount of research has been devoted to the development of crystal detectors in fixed adjustment and packaged in small cartridges. A large advance in the understanding of the mechanism of operation of these devices and studies of the factors making possible the manufacture of high-quality crystals have led to mass production of cartridge units that are considerably superior to their earlier prototypes. The principal work on these devices has been toward the development of rectifiers for use as frequency converters, but advances in the development of low-level detectors have also been significant and have benefited considerably from the other development. Because the development of crystal detectors and units for mixers is a very large field in itself, it will not be possible to give it more than a cursory treatment in the next chapter. The reader is referred to Vol. 15 of this series for a thorough review of the subject. The use of receivers of the variety under discussion here is not sufficiently widespread or complex to warrant a separate treatment in this volume. In the following section some of the considerations that affect the figure of merit for such a receiver will be discussed.

1·6. The Square-law Detector.—Both diodes and crystals function as detectors because of the nonlinear relationship between the current induced in them and the magnitude of the voltage impressed. In general, a smaller current is induced by a voltage of one sign than by a voltage of the other sign. If the current through a crystal is plotted as the ordinate on a linear scale, and the impressed voltage is plotted as the abscissa, a curve of the type shown in Fig. 1·8 is obtained. This plot will be seen to show considerable curvature or nonlinearity in the region of the origin, and it is upon this curvature that the action as a low-level detector depends. If an alternating voltage, such as is shown on the negative current axis, is impressed across this crystal, the current that is passed through the unit has the form indicated in the plot on the right-hand voltage axis. Because there is less current flowing during the negative half-cycles than during the positive ones, there is a net positive

current having magnitude related to the magnitude of the impressed a-c voltage. If the envelope of the a-c voltage varies with time, the net current varies in a related fashion and so has components derived from the amplitude modulation of the impressed voltage wave. This is a picture often used to explain detection and can be found in any reference book.

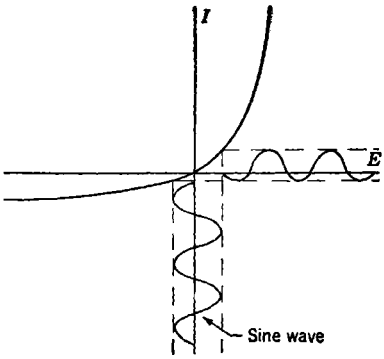

FIG. 1·8.—Graphical representation of detection.

The current in a nonlinear device can be expressed, analytically, as a function of the voltage, and expanded in a Taylor series. The nonlinearity is expressed by the terms in powers of the voltage higher than the first. For very small voltages, the term in the second power of the voltage is large compared with the higher-power terms. Therefore the rectified current produced from a very small signal must be proportional to the square of the impressed a-c voltage. For this reason, low-level detectors are often referred to as "square law" detectors. The induced current is proportional to the incident r-f power. A diode or crystal detector is an entirely passive circuit, in that there is no source of energy other than the input signal. The maximum possible gain of such a detector, according to the definition of gain in the previous section, is unity. Because the detector is a square-law device, its gain decreases with decreasing signal strength unless a change of the output impedance accompanies the decrease in current flow.

The detector, as a generator of modulation-frequency signals, may be considered as a current generator producing a current i, in shunt with an admittance g, as shown in Fig. 1·9. The value of i is proportional to the input power to the detector and the value of g is also dependent upon the input power level. At very low levels, the value of g is relatively independent of the power level, and an effective measure of the gain of the device can be obtained. Because of the square-law dependence of the magnitude of the current generated, this gain is directly proportional to the input r-f power. It is clear that the concept of the noise figure for such a detector is not very useful since the noise figure, too, depends upon the input-signal level. A quantity that is a measure of the quality of a square-law detector can be defined in terms of the magnitude of the

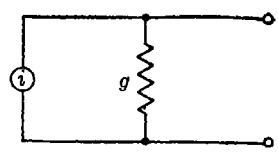

FIG. 1·9.—Modulation-frequency equivalent of a detector.

current produced by the generator per unit of incident power and the magnitude of the generator conductance associated with it.

1·7. The Minimum Detectable Signal Power.—Because the conversion efficiency (gain) of a diode or crystal detector at low level is so small, the device may be described in terms of a two-terminal-pair network in which the transfer admittances are very small compared with the self-admittances associated with the input and output terminal pairs. In such a network the input admittance is almost completely independent of the load admittance presented to the output terminals. Maximum power is therefore delivered through the network when the admittance of the r-f generator connected to the input terminals is the complex conjugate of the self-admittance of these terminals, and the load admittance is the complex conjugate of the self-admittance of the output terminals. The design of the microwave unit associated with the detector is largely concerned with transforming the self-admittance of the input terminals into line admittance so that the detector may be connected to a matched antenna line with maximum power transfer. This specific subject will not be discussed explicitly in this volume, but the techniques involved are similar to those outlined in following chapters on crystal-mixer design. One special problem connected with the experimental design comes about because admittances must be measured with signals sufficiently small to approximate the low-level condition. If the signal strength is sufficiently small, no change in the measured input admittance should result from a further decrease in the signal strength. Since, to satisfy this condition for crystal detectors, the power delivered to the crystal must usually be less than 1 μw, equipment for measurement of the input admittance by the standing-wave-ratio method must have high sensitivity.

In the absence of currents through a crystal the noise voltage at its output terminals is thermal-agitation noise, as discussed in Sec. 1·4 and given by Eq. (3). To evaluate the degree of sensitivity possible with a receiver using a crystal detector, the detector can be considered to be connected to a noise-free amplifier, and the amount of r-f power necessary to produce a signal power equal to the noise power at the output terminals of the amplifier can be found. It has been shown that the current induced in the crystal is proportional to the r-f signal power. This statement may be expressed as

$$i = \frac{P}{b}, \tag{28}$$

where i is the short-circuit current, P is the available r-f signal power, and b is a proportionality constant dependent on the crystal. Since P is defined as the available power rather than that dissipated in the crystal, b includes any losses caused by mismatch between the signal source and

the crystal. If the output terminals of the crystal are connected to the input terminals of the noise-free amplifier of gain G, the output signal power from the amplifier will be

$$P_m = G\frac{i^2}{4g} = \frac{GP^2}{4b^2g}. \tag{29}$$

For this quantity to be equal to the output noise from the receiver it is required that

$$\frac{GP^2}{4b^2g} = GkTB, \tag{30}$$

where B is the effective noise bandwidth of the amplifier, as defined in Sec. 1·6. This equation can be solved for the required r-f power, giving

$$P = 2b\sqrt{g}\,\sqrt{kTB}, \tag{31}$$

where the expression has been separated into two terms because the first relates to the detector unit and the second to the amplifier. This expression holds only for a noise-free amplifier, which cannot be achieved in practice; therefore an expression for a realizable situation must take the amplifier noise into account. The expression can be used, however, to obtain some qualitative information about receivers with low-level detectors. A more rigorous treatment of the subject will be found in Vol. 15 of this series. In Chap. 2 of this volume, an extension of this discussion to include the effect of amplifier noise will be given.

Equation (31) may be compared with a similar expression for an ideal receiver—that is, one with a noise figure equal to unity. For such a receiver the r-f signal power required to equal noise power in the output terminals is just

$$P_0 = kTB_1. \tag{32}$$

The bandwidth B_1 is the effective noise bandwidth of the over-all receiver. For a square-law detector, B_1 is the effective noise bandwidth of the modulation-frequency amplifier. This immediately brings out one feature of a receiver of the detector type. Because the efficiency of the detector is so small, the output noise is independent of the r-f bandwidth of the receiver. In reality, there are two different pass bands to be considered: first, the width of the region of radio frequencies to which the receiver is sensitive, and second, the pass band of the amplifier, which determines the kind of modulation components to which it will respond. For an ideal receiver, the effective noise bandwidth is equal to the square root of the product of the bandwidth before detection and that after detection, because it is the fluctuation in detected noise power, which can pass through the circuits following the detector, that tends to mask a small signal. The performance of a receiver in which a low-level detec-

tor is used approaches that of the ideal receiver more closely if the r-f bandwidth is large compared with the amplifier pass band than if the two pass bands have similar widths. This is the type of service in which receivers of this kind have been most widely employed. For use at beacon stations, for instance, a receiver that responded to pulses of about 2-μsec duration anywhere in a frequency band of about 120-Mc/sec width, was required. The simplicity of a receiver with a crystal detector was considered worth the loss in ultimate sensitivity compared with other receivers. For very large bandwidths, greater than about 150 Mc/sec, only receivers with the low-level detectors have so far been used to receive in the whole band continuously, because amplifiers have not yet been made for bands wider than about 70 Mc/sec. If intermittent response to each frequency in the band is acceptable, a sweeping superheterodyne may be used.

If the receiver is to be responsive to a band of frequencies only sufficiently wide to carry the desired modulation components, then the bandwidth before detection and the over-all receiver bandwidth are similar. Hence,

$$\frac{P}{P_0} \approx \frac{2b\sqrt{g}}{\sqrt{kTB}}. \tag{33}$$

The smaller this quantity, the more closely does the receiver having a low-level detector approach the ideal noise-free receiver. It will be seen that, again, wide pass bands are favored; thus, for example, the low-level detector might be satisfactory for receivers designed to respond to extremely short pulses. In general, however, for receiver bandwidths of 1 or 2 Mc/sec (before detection) the minimum detectable signal power is larger, by a factor of about 10^5, than that obtainable with receivers of other types. Receivers of the low-level-detector type have not been used extensively, except at beacon stations.

One way of reducing the minimum detectable signal for this type of receiver is to precede the detector with r-f amplifiers having sufficient gain to make noise generated ahead of the detector contribute a significant part of the total output noise from the detector. In this case the over-all noise figure of the system becomes dependent on the noise figure of the r-f amplifying system. If the amplification is sufficiently great to make r-f noise contribute all but a negligible part of the detector output noise, the receiver noise figure is completely determined by the noise figure of the r-f amplifiers. Since these amplifiers are usually made with resonant circuits, they also act as preselectors. The receiver is then similar to the tuned r-f receivers commonly used at lower frequencies before the advent of the superheterodyne. Because the minimum signal power detectable by a low-level detector is relatively large, a high gain

would be required of a noise-free amplifier. In the example cited, the gain would have to be greater than 10^5. A gain this large would require several stages of amplification by tubes available even at the lowest frequencies in the microwave region. In this low-frequency region, improvement can be made by use of r-f amplifiers, but the system becomes relatively complex and a smaller minimum detectable signal can be obtained with a superheterodyne receiver. It would be advantageous to use noise-free amplifiers ahead of a superheterodyne receiver. Because a superheterodyne receiver having a moderate bandwidth can detect a much smaller signal than can the low-level detector, less gain would be required of a noise-free amplifier to make the over-all noise figure approach unity. A discussion of existing types of r-f amplifiers will therefore be deferred until the superheterodyne receiver has been described.

1·8. The Superheterodyne Receiver.—The superheterodyne receiver makes use of a frequency converter, which changes the signal into one

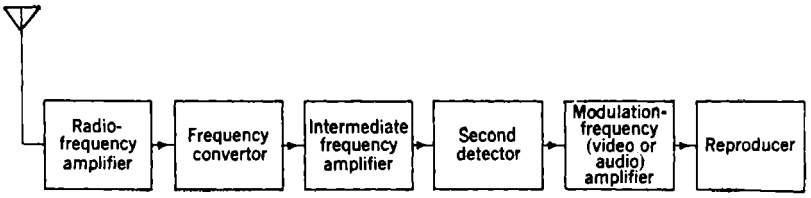

FIG. 1·10.—Block diagram of a superheterodyne receiver.

centered at a different frequency. The signal is then amplified at this new frequency before demodulation by a detector. Because the amplification usually occurs at a frequency lower than the signal frequency (that is, the converter produces a downward frequency conversion), the amplifier is called an intermediate-frequency or i-f amplifier. A detector at a relatively high level is used, following the amplifier, to detect the modulation components carried by the signal, and modulation-frequency amplifiers are usually used to make the signal large enough to drive the reproducing device. A block diagram for such a superheterodyne receiver is shown in Fig. 1·10.

At conventional frequencies, the advantages of a superheterodyne over receivers of other types are numerous. The fact that the i-f amplifier is operated at a fixed frequency allows the receiver to be designed with almost any shape of bandpass characteristic desired, with full utilization of the gain available from the tubes used, compatible with the bandpass circuits. The r-f selectivity, except for image-frequency effects, is completely determined by the selectivity of the i-f amplifier. Because this amplifier need not be tuned, highly selective circuits can be used.

The tuning of a superheterodyne receiver is accomplished by adjustment of the frequency converter and of any selective circuits occurring between the receiver and the antenna terminals.

Another property of this receiver is that the signal level at the second detector is sufficiently high to make the noise contribution from this part of the system completely negligible. Under this condition, the detector may be chosen on the basis of its fidelity in reproducing modulation, rather than on the basis of its noise figure. Relatively little modulation-frequency amplification is needed because the output level of the detector is high.

As a receiver for microwave signals, the superheterodyne has another property, which is not so important at other frequencies. Ordinarily, the radio frequency and intermediate frequency are of the same order of magnitude but this need not be so. For a microwave receiver, the frequency converter is usually made to convert the microwave signal into one at a relatively low frequency, with the result that conventional lumped-constant circuits and ordinary pentode and triode vacuum tubes may be used in the i-f amplifier. A receiver having a noise figure approaching that of a low-frequency amplifier can be made, provided the frequency conversion can be accomplished with a device having a small noise figure. Under such a condition, an r-f amplifier would not improve the over-all noise figure of the receiver unless it had considerable gain and a noise figure smaller than that of the frequency-converter and the i-f amplifier combined.

Another property of the superheterodyne receiver, especially for microwave frequencies, is its susceptibility to frequency control. In most microwave receivers, the intermediate frequency is less than 1 per cent of the radio frequency; consequently, the effect of time and temperature drifts in the highly selective circuits upon the receiver frequency setting is smaller, by a factor of 100, than it would be if the selectivity were accomplished at the radio frequency. Furthermore, since there is little to be gained in making any r-f circuits as selective as the i-f ones, the control of the receiver frequency can be accomplished by control of the converter alone. Thus, the superheterodyne receiver is especially well adapted to microwave frequencies and has been used almost exclusively except in cases where the receiver bandwidth must be greater than can be accomplished with i-f amplifiers. The recent advances in the development of i-f amplifiers (see Vol. 18 of this series) have resulted in amplifiers with noise figures near unity and bandwidths much greater than were previously used. The emphasis of this volume will be on the subject of circuits for frequency conversion and the circuits associated with the frequency control of the frequency-conversion device. The design of microwave low-level crystal-detector circuits will not be discussed speci-

fically, but the method of attack should be apparent from the methods discussed in connection with frequency converters.

1·9. The Frequency Converter.—In low-frequency superheterodyne receivers the frequency conversion is accomplished through the combined use of a local oscillator and a mixer. The local oscillator is simply a continuous-wave oscillator operating at a frequency somewhat different from that to which the receiver is to be sensitive. In the mixer, a superposition of the local-oscillator wave and the input signal takes place. A beat, or heterodyne, frequency equal to the difference frequency between the two waves exists as an amplitude-modulation component on the superposition of waves within the mixer. The mixer produces at its output terminals a voltage or current corresponding to this heterodyne frequency. Signal frequencies that differ from the local-oscillator frequency by the intermediate frequency, produce a heterodyne frequency equal to the intermediate frequency and so are amplified by the i-f amplifier. If the signal is not a continuous wave but is a modulated wave, it may be considered as a combination of Fourier components, each of which produces its own heterodyne frequency. The output signal from the mixer contains a component for each component in the incoming signal. The amplitude, frequency, and phase relations between these components are preserved as the signal passes through the mixer. The signal entering the i-f amplifier therefore contains the same modulation as the r-f signal, but is centered at the intermediate frequency. Only those components lying within the pass band of the i-f amplifier will continue through the receiver, and it is for this reason that the bandwidth of the receiver is just the bandwidth of the i-f amplifier, provided no narrower circuits are used in the mixer, or ahead of it. A block diagram for a converter of this type is shown in Fig. 1·11.

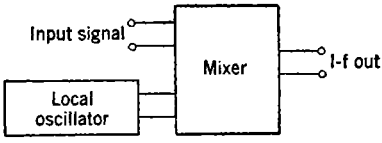

FIG. 1·11.—Block diagram of a converter.

If the local-oscillator frequency is f_ω there are two frequencies that give rise to the intermediate frequency f_β. These are $f_\omega + f_\beta$ and $f_\omega - f_\beta$, since the difference between each of these and f_ω is equal to the intermediate frequency. For this reason, the combination of a converter and an i-f amplifier is sensitive to two r-f bands, each of a width equal to the bandwidth of the i-f amplifier, and differing in center frequency by twice the intermediate frequency. This situation gives rise to one of the principal imperfections encountered in the superheterodyne receiver, the so-called image response. At ordinary frequencies, there is usually a tuned circuit associated with the signal input terminals of the mixer, which is adjusted to favor one of the two signal frequencies, and which is

caused to follow the tuning of the local oscillator in such a manner as to maintain the required frequency difference. The frequency to which this circuit is tuned is termed the signal frequency for the receiver. The other frequency to which the converter unit is sensitive, and which is discriminated against by the input circuit, is called the image frequency. There is no particular convention as to which of these is the higher frequency. Sometimes the choice is made so that the image frequency falls in a region where there are few strong singals to be expected. In this way, interference by signals at the image frequency is minimized. In low-frequency receivers, the intermediate frequency is often chosen to be quite high to secure a large image suppression, without requiring highly selective circuits in the r-f part of the receiver. However, the condition that the intermediate frequency be low enough to allow the use of conventional tubes and lumped-constant circuit elements limits the choice of intermediate frequencies for microwave receivers.

It should be noted that, if no difficulties with interference or confusion of signals are encountered because of the two frequency bands of sensitivity of a converter, there is little to be gained through the use of preselection unless the noise figure of the converter is nearly unity. If a converter has a noise figure of unity, the entire noise power available at its output terminals originates on the r-f side of the converter. The ratio of a signal to noise power at the output terminals of the converter can be doubled by the use of a preselection circuit that eliminates the noise contributed from the image-frequency region. If a large part of the output noise from an imperfect converter arises within the device itself, however, preselection can have little effect on the available i-f noise power. Since this is true of all known frequency converters for microwave signals, the effective noise bandwidth of such a receiver is considered to be that of the i-f amplifier, whether or not preselection is used. In addition, a circuit that reduces the sensitivity of the receiver to image-frequency signals from the antenna does not necessarily suppress the i-f noise power available from the converter and may even increase it. Some of the small variations in converter noise figure which can be produced by special treatment of the image-frequency voltages are discussed in Chap. 2 in connection with the linear-network representation for a converter.

Because a mixer usually contains a nonlinear circuit element for the detection of the heterodyne frequency, there exist in its output circuit many frequency components of second and higher orders, corresponding to sums, differences, and products of all of the input frequencies and their harmonics. These components, too, can give rise to spurious responses in the receiver, especially if very strong signals outside the receiver band are allowed to enter the mixer. Preselection, which restricts the allowed frequency range to one comparable with the i-f bandwidth, is very desira-

ble if such signals are anticipated, even if the fidelity and the minimum detectable signal, in the absence of interfering signals, are unaffected. Since most of the circuits to be discussed were designed for use in pulse-radar systems, preselection is achieved by means of the resonant TR cavity of the duplexer that precedes the converter. If the receiver is to be used for some other purpose, the design should therefore include a preselecting resonator that has characteristics similar to those of the TR cavity but need not be capable of electrical breakdown. Many of the circuits demand the use of such a resonator, independently of any preselection function for the over-all receiver, to allow satisfactory operation of the LO coupling circuit. For this reason, the TR cavity used with each mixer discussed will be indicated.

As mentioned in Sec. 1·1, in which the terms "mixer" and "converter" were defined, some special vacuum tubes have been developed for performing these functions at conventional frequencies. Converter tubes combine the function of local oscillator and mixer in one envelope. Mixer tubes and the mixer sections of the special converter tubes accomplish the mixing in the electron stream flowing to the plate of the tube. All of these electronic mixer tubes require that the drift time of the electrons through their many elements be short compared with the period of the r-f waves which they mix. Their performance consequently falls off at even lower frequencies than does that of the simpler conventional tubes. At moderately high frequencies, it has been found advantageous to return to the older technique of accomplishing the superposition of waves in circuits external to the tube and using a tube of simpler construction, such as a triode or diode acting as an amplitude-modulation detector, to perform the mixer function. At microwave frequencies there is almost no other course, and even the drift time between cathode and grid in a triode, or cathode and plate in a diode, is excessive except in some very specially designed tubes in the lower-frequency part of the microwave region. Since the developments to be described in this volume are chiefly concerned with the frequencies from 3000 Mc/sec upward, these tubes will receive practically no attention elsewhere in this book, but it might be well for historical purposes and for purposes of orientation to mention briefly some of the more successful types.

1·10. The Triode Mixer.—The effective noise figure of two cascaded networks, given in Eq. (26), depends inversely upon the gain of the first network, and directly upon the noise power available from it, as measured by t. If a triode or multielement tube is to be used as a mixer, the gain that can be realized falls off with increasing frequency because of the time required for the electrons to cross the gaps between the elements. One phenomenon caused by the transit time is an apparent grid-to-cathode conductance, which increases as the frequency is increased. This con-

ductance sets an upper limit to the grid-to-cathode voltage that can be developed from a given signal power, with the result that the gain decreases with increasing frequency. In order that this effect may be minimized, the interelectrode spacings must be made very small, and in order that the grids may function as electronic shields, they must then be made of very fine mesh. The manufacturing tolerances that must be maintained

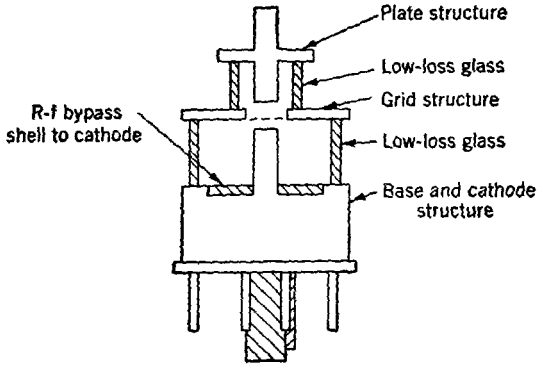

FIG. 1·12.—Cross-sectional view of a typical lighthouse tube.

and the difficulties of working with such extremely small parts have prevented the development of usable tubes of this sort for frequencies higher than about 3000 Mc/sec, except on a restricted, experimental basis.

At frequencies up to 3000 or 4000 Mc/sec, tubes of the lighthouse type (plane-parallel electrodes) have been used as mixers. The noise figure of a mixer using such a tube has never been made so small as the noise figure for crystal mixers. Hence, the use of lighthouse tubes in this service has never become widespread except in the very lowest frequency region (below 1000 Mc/sec). The design of the circuit for such a device is determined largely by the particular tube available. Usually a resonant circuit between the grid and cathode is employed to match the available signal power into the grid conductance of the tube.

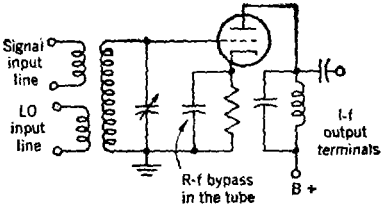

FIG. 1·13.—Circuit diagram of a lighthouse-tube mixer.

A sketch of a typical lighthouse tube, such as the GL446, or the 2C40 tube, is shown in Fig. 1·12. The grid of this tube is a rectangular wire mesh, mounted on the grid ring and made of wire 0.002 in. in diameter, with the centers of the wires spaced 0.010 in. apart. The cathode-to-grid spacing averages 0.005 in. and the grid-to-plate spacing is 0.010 in. All of the elements are plane-parallel, including the cathode which is

indirectly heated. A typical low-frequency circuit using a lighthouse triode as a mixer is shown in Fig. 1·13.

The tube is biased near cutoff by the self-biasing resistor in the cathode circuit and then driven relatively hard by the injected local-oscillator voltage. Consequently, on the negative half-cycle very little change in plate current occurs, whereas on the positive half-cycle considerable plate current flows. The average plate current, therefore, depends upon the magnitude of the voltage at the grid, and since this voltage is composed of the local-oscillator voltage plus a small signal voltage, the beat or difference frequency will exist as a component of the plate current. As long as the signal voltage is small compared with the local-oscillator voltage, as measured at the grid, the beat-frequency current flowing in the plate circuit must be directly proportional to the signal amplitude. The mixer, therefore, is a linear device, as contrasted with the square-law low-level detector. Because the tuned circuit must be resonant for the signal frequency, the efficiency of transfer of the local-oscillator signal to the grid is relatively low. Considerably greater local-oscillator power must be available than would be otherwise necessary. Moreover, the loss of signal power into the local-oscillator circuit must be kept small. This particular requirement is one that has an important influence upon the design of all mixers to be described, for it must be met if the minimum noise figure possible with a given type of mixer element is to be achieved. The resonant circuit in the plate lead of the mixer tube of Fig. 1·13 serves to develop an i-f voltage from the beat-frequency component of the plate current and so is made to resonate at the intermediate frequency.

A sketch of the basic parts of a microwave mixer circuit designed by P. A. Cole for operation near 3300 Mc/sec, which is equivalent to the low-frequency circuit, is shown in Fig. 1·14. The resonant grid-to-cathode circuit is made up of the radial cavity, which is somewhat lessened in radius by the lumped-capacitance loading due to the grid-to-cathode capacitance of the tube at its center. The signal voltage is coupled in by means of the coaxial line, the center conductor of which crosses to the opposite wall of the resonator. The signal power may be matched into the cavity by proper choice of the distance from the center of the cavity to the point at which the coaxial line enters the cavity. The greater this distance, the larger the voltage stepup from the coaxial line to the grid. The signal line also affects the resonant frequency of the cavity, and, consequently, the cavity diameter is not independent of the position of the input line. These two dimensions are determined experimentally.

To achieve the small coupling between the grid-to-cathode region and the LO input line, the distance from the outside edge of the resonator to the LO input line is made considerably shorter than the distance to the signal line. This procedure may be considered to be analogous to the use,

in the circuit of Fig. 1·13, of a much larger stepup ratio for the local-oscillator circuit than for the signal circuit. A matched termination on the local-oscillator line then contributes only a small admittance at the grid of the tube. Consequently, little signal power is lost in this con-

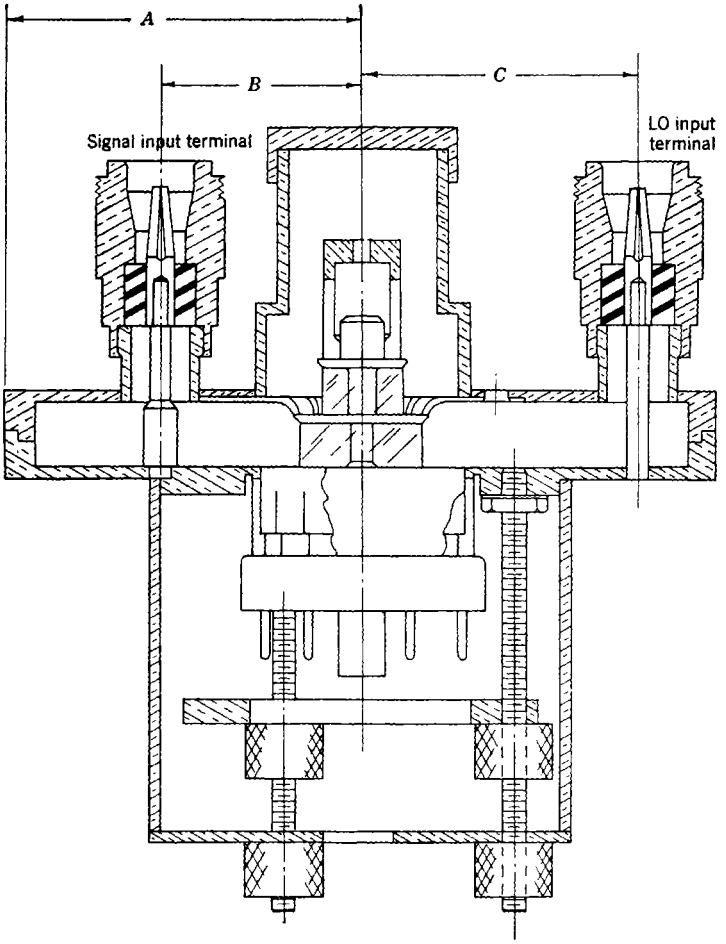

FIG. 1·14.—A microwave mixer circuit.

ductance, compared with that delivered to the grid-to-cathode conductance of the tube. To ensure that the local-oscillator line is matched, a cable with a distributed loss of several decibels between the local oscillator and the mixer is used. In addition, the cable serves to minimize the effects on the local oscillator of the large reflections at the mixer of local-

oscillator signals. Such reflections exist because the local-oscillator line is not terminated in the characteristic admittance of the line. In this way the behavior of the local oscillator is less affected by the mixer circuit than it would be in the absence of the dissipative cable, but the available local-oscillator power required is increased.

The circuit of Fig. 1·14 includes no provision for tuning the resonator as would, in general, be required for a tunable receiver. This particular circuit was designed for operation with a very wide i-f amplifier to cover the entire range from 9.0 to 9.2 cm with fixed tuning. The Q of the resonant circuit was found to be just low enough to allow this. The resonant wavelength was 9.1 cm with a tube of average input capacitance.

If the mixer must be tunable, provision for adjustment of the effective resonator radius can be made. This can be done by the inclusion of screw plugs of large diameter so placed around the outside wall of the resonator that, when they are screwed into this wall, they fill the region between the top and bottom resonator walls for a part of the circumference. The average radius is thus reduced, and hence the resonant frequency of the circuit is increased. The coupling ratio for the signal input line will not remain constant, nor will the cavity losses. It is not advisable therefore to attempt to cover a very great tuning range by such a means. Because triode mixers are not used extensively in the microwave region, the many methods by which tunable cavities and measurements on them may be made will not be discussed here. The reader who is interested in this subject is referred to Vol. 7, which deals with microwave vacuum tubes, and Vol. 14 on TR tubes, where these matters are considered in detail.

The triode mixer of Fig. 1·14 was found to have a noise figure of about 100 or, as usually expressed since it is a power ratio, 20 db at the center of the band and about 23 db at 9.0 cm and 9.2 cm. The exact value depends, of course, on the particular tube used, but this value is not so small as the noise figure of receivers using other types of mixers. The noise figure of the triode mixer is high because, although it has a larger conversion gain than some other mixers, the noise power available in the plate circuit is large. All tubes develop noise through the "shot effect" and because some electrons are stopped by the grid. The over-all noise figure of a triode mixer decreases if the radio frequency is decreased, because the grid-to-cathode conductance decreases with frequency as a result of the decreased transit angle of the electrons. This allows a larger gain to be obtained with the mixer with almost no change in the available noise power, if the intermediate frequency is held constant.

1·11. The Diode Mixer.—Another tube that can be used in a converter is a diode. At low frequencies, where the transit angles are negligible, both the gain and the noise of the diode mixer are smaller than those

of a triode mixer. Like the triode, the diode, to be useful at microwave frequencies, must have a small interelectrode spacing, in order to minimize the transit time. The diode must be so constructed that the tube can be made an integral part of the microwave circuit. The construction of diodes with plane-parallel electrodes, such as are used in the lighthouse tubes, has proved to be one of the most successful methods.

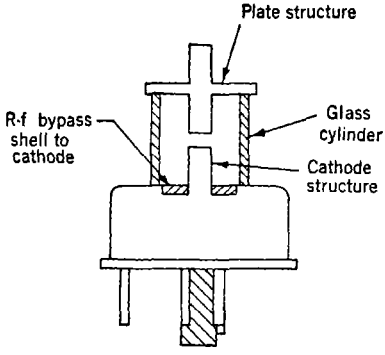

FIG. 1·15.—Cross-sectional view of a typical diode used for a diode mixer.

Figure 1·15 shows the construction of a typical diode. The cathode is plane, and forms the top of a cylinder that contains an indirect heater element, as in the triode. The anode is a cylindrical post, separated by a very few mils from the cathode, with its face parallel to that of the cathode. A typical low-frequency circuit for a mixer containing a diode is shown in Fig. 1·16. In addition to a d-c component, the diode plate current contains the beat-frequency component, because the diode passes a current only during the positive half-cycles of the input voltage, which consists of the superposition of the small signal on a relatively large local-oscillator voltage. If the beat frequency is equal to the intermediate frequency, an i-f voltage is developed across the i-f resonant circuit in the plate circuit. As is true for the triode, the magnitude of this voltage is proportional to the amplitude of the signal voltage if the signal voltage is very small compared with the local-oscillator voltage. The circuits used between the cathode and plate of the diode may be the same that are used between the grid and cathode of the triode. If the shell of the tube is actually connected to the cathode, a bypass condenser must be built into the circuit between the resonator and the shell to prevent short-circuiting of the i-f voltage. In some tubes, this condenser exists within the tube itself. This allows the resonator to be connected directly to the base part of the tube. The same is true for the triode circuit, where bias voltage must be developed for the cathode.

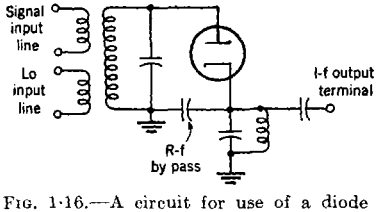

FIG. 1·16.—A circuit for use of a diode as a mixer.

The noise figure of the diode mixer used in combination with an i-f amplifier of noise figure F_2 is given by Eq. (26), where the gain G is always

less than unity, representing actually a loss, and the noise temperature t is greater than unity. Since the gain is less than unity, the noise figure of the succeeding i-f amplifier is relatively more important than for a mixer with a large gain. The best operating point, with respect to driving power from the local oscillator, results if a compromise is made between gain and noise temperature. The gain increases with increasing driving power, but the rate of increase becomes small for large local-oscillator drive. The noise temperature also increases with increasing driving power because of the larger current flow in the plate circuit of the tube. In addition, the output impedance varies with driving power, and there exists a limit to the amount of driving power that can be coupled into the mixer from a given local oscillator. If this limit is exceeded, the signal loss into the local-oscillator circuit becomes significant. The optimum driving power must consequently be chosen—usually experimentally—for the particular combination at hand. At 3000 Mc/sec, the minimum over-all effective receiver noise figure that can be achieved with a diode mixer is about 18 db. At higher frequencies, poorer noise figures are found, because of the increased transit angles.

As a consequence of its relatively poor noise figure the diode mixer is not widely used; therefore it will not be discussed in detail here. For information about cavity circuits, the reader is referred to literature dealing with tube design. Diode and triode mixers may be successfully used in the lower-frequency regions if noise figure is not a primary consideration and if resistance against damage by excessive input power is of great importance. A disadvantage in addition to that of noise figure is that these tubes must always be used in resonant circuits, in order that the shunting effect of the grid-to-cathode or plate-to-cathode capacitance may be eliminated. If a wide tuning range is desired for the receiver, the resonant circuit must be tuned at the same time as the local oscillator. To accomplish tuning, the physical size of the resonators must be variable, and the manufacture of the circuits and the operation of the receiver are therefore difficult. These difficulties can be eliminated by the use of mixing elements of other types.

1·12. The Crystal Mixer.—The crystal rectifier has been developed to the extent that it is the most effective mixer element for the superheterodyne receiver at microwave frequencies. The qualitative description of the operation of a crystal as a mixer is similar to that of the diode and, as in the case of the diode, the i-f voltage is linearly dependent upon the signal amplitude, for signals small compared with the local-oscillator power. Because the part of the crystal in which rectification takes place is physically very small, transit-time effects are minimized and may be neglected, for most purposes, even in the microwave region. The considerable effort that has gone into the design of crystal-rectifier elements

for this purpose during the war has resulted in a very great improvement in the various parameters that determine the usefulness of a crystal mixer. At the beginning of the development the crystal was found to be slightly better in over-all noise figure than any vacuum-tube mixer then available. The subsequent improvement has been so great that the crystal now compares even more favorably with the improved vacuum tubes now available. In fact, one result of the improvement in crystal rectifiers has been the replacement of vacuum-tube r-f amplifiers and mixers by the simpler crystal mixers, even at frequencies as low as 700 Mc/sec. The subject of the design of the crystal unit is treated in Vol. 15 of this series. A short discussion of the properties of these units relevant to the design of mixer and converter circuits, as developed at the Radiation Laboratory, is to be found in Chap. 2 of this volume. In subsequent chapters, specific mixer designs are discussed. Suffice it to say, here, that rugged receivers using crystal units as mixers can be made that have over-all noise figures as low as a factor of 5 (7 db), at frequencies up to 25,000 Mc/sec. When it is realized that such noise figures were rarely achieved, even at frequencies of a few megacycles per second, before the war, the significance of the crystal as a mixer element for use at microwave frequencies and the justification for placing the emphasis of this volume almost completely on a receiver of this type become apparent.

1·13. The Local Oscillator.—An important component of the superheterodyne converter, which has not yet been discussed but the existence of which has been assumed, is the local oscillator. Here, again, is a field of development which is so highly specialized and so extensive that it can not be discussed from the point of view of tube design in this volume. The physical and electrical characteristics of the available local-oscillator tubes, however, have a considerable influence on the design of the mixer units that will be discussed. It is necessary, therefore, to describe briefly tubes of the more common types.

The usefulness of the triode and of the more complex space-charge tubes is limited by the transit times between the various elements when the tubes are to be used as oscillators, just as when they are used as amplifiers and converters. If a tube of this type is to be used as an oscillator, it is necessary that the gain of the tube as an amplifier be greater than unity in order that positive feedback can sustain oscillations. The only tubes of this type which can be used successfully as oscillators are those that are specially designed with small interelectrode spacings and with a shape that allows them to be made an integral part of the cavity type of oscillator circuit. The lighthouse tube is probably the best example of this construction available in quantity, but the highest frequency at which most lighthouse tubes oscillate is in the neighborhood of 3000 Mc/sec. In order to make an oscillator for frequencies higher than this,

it is necessary to make use of entirely different principles. At present the most widely used local-oscillator tube is the klystron. This tube utilizes the principle of velocity modulation of an electron beam. In addition to its ability to oscillate at very high frequencies, the velocity-modulation oscillator, through the introduction of the reflex principle, has become the simplest kind to manufacture and to operate. It also has the advantage of being both electronically and mechanically tunable in a very simple manner. A klystron oscillator of the original two-cavity kind is shown schematically in Fig. 1·17. An electron gun, similar to those used in cathode-ray tubes, with focusing electrodes to form a small-diameter beam directed upward through the grids of the cavities, is indicated at the bottom of the figure. The beam is accelerated by the large potential, positive with respect to the cathode, on the cavities. The field is so shaped, and the grids of the cavities are so constructed, that the beam

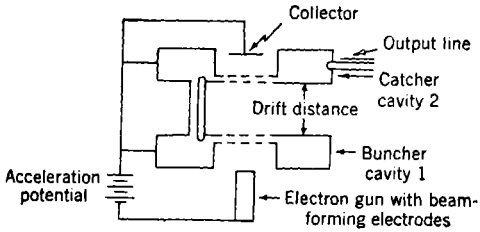

FIG. 1·17.—Schematic diagram of a two-cavity klystron oscillator.

passes on through all of the grids with very small interception of electrons by the grids. The beam is finally collected on the positive electrode at the upper end of the tube. The cavities are made to be resonant at a common frequency and their shape is such that, if they are excited by a wave of the resonant frequency, a large field is developed between the two grids of each cavity. These grids may be considered as forming the capacitive part of a shunt-resonant circuit. The electric field, if it exists, is directed parallel to the path of the electron stream, and so will alternately accelerate and decelerate the electrons passing through the grids. In accordance with the usual procedure in describing the operation of an oscillator, the excitation of the cavities will be assumed to exist and the device will be examined to see if the excitation can be maintained. Suppose that cavity (1) contains some r-f energy. This cavity will velocity-modulate the stream sinusoidally with the frequency of the resonance of the cavity. As the stream drifts on toward cavity (2), the density of the electrons will no longer be uniform, since those slowed down by the field in the grid space of cavity (1) will be overtaken by those accelerated in that region. The spacing between the two cavities can be so chosen that there are bunches of electrons passing through the grids of the cavity (2) with a

recurrence frequency equal to the resonant frequency of cavity (1). The first cavity is therefore called the buncher cavity. If the second cavity is resonant at the same frequency and if, furthermore, the phase of the voltage in this cavity is properly adjusted, the field between its grids opposes the transit of electrons between them at the time the bunches arrive. In this way the electron stream is made to give up energy to the r-f field, since very few electrons transit the grids at a time when they would be accelerated and so take energy from the field. The second cavity is therefore called the catcher. Thus the passage of electrons through cavity (2) is made to maintain the energy in this cavity in sufficient strength to allow some of this energy to be coupled out to excite cavity (1) and some to be coupled out as the useful power from the oscillator. The proper drift time between the first and second cavities is obtained by choice of the acceleration voltage on the beam, and by the spacing between the cavities. It is, of course, influenced by the relative phase of the excitation of the two cavities, which in turn depends upon the line length of the feedback loop. A simpler embodiment of the velocity-modulation principle, for use as a low-power local oscillator is the reflex klystron. This tube operates in much the same fashion, but has only one cavity, used as both buncher and catcher, and is therefore easier to make and to operate. The two-cavity klystron, and even three-cavity klystrons, are used as power oscillators, amplifiers, and even as frequency multipliers. The various oscillator tubes and their uses are discussed in Vol. 7 of this series.

1·14. The Reflex Klystron.—The reflex velocity-modulation oscillator may be described with the aid of Fig. 1·18. The beam of electrons passes through the cavity grids and enters the retarding field of the reflector which is at a negative potential with respect to the cathode. The retarding field is sufficiently strong not only to prevent the electrons from arriving at the reflector but also to return them through the grids of the cavity. If an r-f field exists between the grids of the cavity, the electrons will be velocity-modulated by this field, and thus will be caused to form bunches as they drift toward the reflector and then back to the grids. The time between the first and second passages of a particular group of electrons is dependent upon the magnitude of the retarding field, and this field can be chosen to make the arrival of bunches back into the grid region correspond to the times when the field is directed against the backward transit of the electrons. The bunches, therefore, give up energy to the

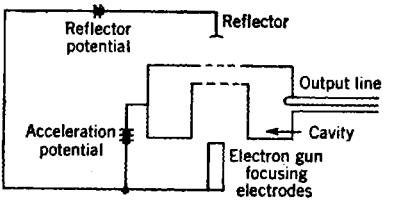

FIG. 1·18.—Functional drawing of the reflex klystron.

r-f field and maintain oscillation at the cavity frequency. The bunches form around electrons which, while traveling toward the reflector, pass through the cavity at a time when the r-f field is going through zero from the accelerating to the decelerating direction. This is because the accelerated electrons penetrate more deeply into the reflecting field and therefore take a longer time to return to the cavity than do the unaccelerated electrons. The decelerated electrons, correspondingly, take a shorter time to return. For oscillations to be maintained, the total drift time of an electron that is not acted on by the field in the first transit must be $(n + \frac{3}{4})$ cycles, where n is an integer. For a given acceleration potential, there are several values of the reflector potential which will give rise to oscillations, corresponding to several different values of n. These are referred to as reflector-voltage modes. As the reflector voltage is increased in the negative direction with respect to the cathode, the mode number n decreases and, because the electrons are returned at higher backward velocities as the reflector voltage is increased, the output power increases with increasing reflector voltage. There is a limiting reflector voltage, however, for which the drift time becomes too short to give good bunching. Thus, for a particular tube and accelerator voltage, there is a reflector-voltage mode that gives maximum output power. It may be said that the velocity-modulation tube surmounts the difficulty of transit-time effects, first by causing the pertinent electrode gaps to be transited by accelerated electrons instead of by electrons starting from rest and, second, by making use of the drift time outside of these electrodes as the means of producing bunching.

The reflex oscillator is simpler in operation than the two-cavity tube because there is only one adjustment that must be made to satisfy the condition for oscillation. This adjustment consists of setting the reflector voltage to give the proper phase to the reflected electron bunches. Oscillation occurs not only for a discrete set of voltages corresponding to an exact integral value for n, but also if the reflector voltage is varied slightly either side of the exact value. Operation under this condition reveals one of the most useful properties of the reflex oscillator, namely, that of electronic tuning. The slightly incorrect reflector-voltage setting gives rise to slightly out-of-phase currents in the cavity resonator and these currents can be resolved into components, one in the correct phase and one at 90° to this. The 90° component is purely reactive in character and results in a change in the oscillator frequency in just the same way as would a change of the capacitance between the grids. Since the orthogonal component can either lead or lag the in-phase component, the frequency may be altered in either direction from the cavity frequency, depending upon whether the reflector voltage is made slightly greater or slightly less than the value making n exactly an integer. As

the reflector voltage is altered from this value, there results, in addition to the frequency change, a decrease in the amplitude of oscillation, because the in-phase component of the induced cavity current falls off, and the oscillator finally falls out of oscillation. Most of the reflex oscillators currently used as local oscillators in frequency converters are so designed that a considerable range of frequency can be covered by the electronic tuning before the output power falls to half its value at the center of the reflector-voltage mode. Figure 1·19 shows a typical plot of the reflector-voltage modes of a reflex oscillator. The abscissa is the reflector voltage, increasing in the negative direction toward the right. The ordinate for the solid curves is the output power, and the ordinate for the broken curves is the frequency relative to the resonant frequency of the cavity. Since the mode of highest output power does not give the maximum tuning range, the choice of the operating mode is made as a

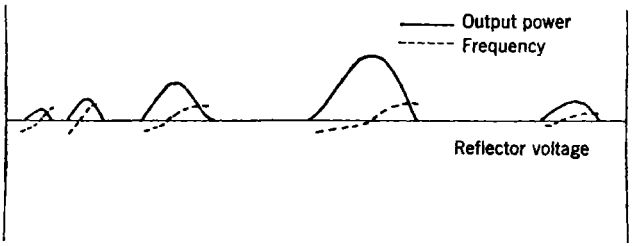

FIG. 1·19.—Typical reflector-voltage characteristics for a reflex klystron.

compromise between large output power and large electronic-tuning range.

Since the reflector does not collect electrons, it draws no current. Consequently, the electronic tuning device can be a very-high-impedance source of voltage. For this reason, the provision for frequency control of a converter can be accomplished very simply and effectively through the control of the reflector voltage of the local oscillator. In many cases, of course, the frequency range of the reflector tuning is not sufficient to cover the required tuning range of the receiver and mechanical tuning must be incorporated as well. Mechanical tuning is accomplished by altering the size or shape of the cavity of the oscillator. In some cases, the tube itself contains only the grids, and the rest of the cavity is attached to flanges external to the glass wall of the tube. The tuning of such a tube is accomplished through the use of plungers or tuning screws in this external part of the cavity. There are usually several such screws around the circumference of the cavity as well as an output loop and coaxial line, or an exit iris with a waveguide, by means of which power is extracted. The tube now most commonly used is of metal construction and contains the entire cavity as an integral part. The tuning of

TABLE 1·1.—LOCAL-OSCILLATOR TUBES

Type No.	Class	Frequency range, Mc/sec	Resonator	Beam voltage, volts	Beam current, ma	Reflector voltage, volts minus to cathode	Output power, mw	Electronic tuning range, Mc/sec	Manufacturer
2C40	Triode	≦ 3500	External	400	20	None	.....	None	GE, RCA
2K25	Reflex	8500–9660	Internal	300	22	110–170	28	45	BTL, WE and
						60–110	23	65	Raytheon
726C	Reflex	2700–2960	Internal	300	22	90–130	120–200	30	WE
726B	Reflex	2880–3175	Internal	300	22	90–130	70–155	35	WE
726A	Reflex	3175–3410	Internal	300	22	130–165	110	30	WE
2K29	Reflex	3400–3900	Internal	300	22	90–172	75–150	48–34	BTL, WE
2K22	Reflex	4300–4900	Internal	300	22	.....	(75)	.....	BTL, WE
2K27	Reflex	5200–5570	Internal	300	22	.....	(40)	.....	BTL
2K26	Reflex	6250–7060	Internal	300	22	.....	(25)	.....	BTL, WE
2K28	Reflex	1200–3750	External	250	25	110	70	21	Raytheon
(707*B*)						250	110	22	
						(At 3500 Mc/sec)			
2K41	Reflex	2650–3320	Internal	1000	50	380	450	6	Sperry
(417A)				400		50–180	55–35	8–3	
2K39	Reflex	7500–10300	Internal	1250	45	600	350	20	Sperry
(419B)						350	270	40	
				700	19	40	70	6	
2K42	Reflex	3300–4200	Internal	1250	45	750	600	12	Sperry
2K43	Reflex	4200–5700	Internal	1250	45	750	600	7	Sperry
2K44	Reflex	5700–7500	Internal	1250	45	750	600	20	Sperry
3K27	Reflex	770–970	Internal	1000	60	600	1500	6	Sperry
3K23	Reflex	950–1150	Internal	1000	60	600	1500	6	Sperry

TABLE 1·1.—LOCAL-OSCILLATOR TUBES—(*Continued*)

Type No.	Class	Frequency range, Mc/sec	Resonator	Beam voltage, volts	Beam current, ma	Reflector voltage, volts minus to cathode	Output power, mw	Electronic tuning range, Mc/sec	Manufacturer
2K45	Reflex	8500–9660	Internal (thermal tuning triode)	300	25	95–145	30	45	BTL, WE
2K33	Reflex	23600–24400	Internal	1800	8	100	20	40	Raytheon
2K50	Reflex	23500–24500	Internal (thermal tuning triode)	300	22	60–80	10	55	BTL, WE

this tube is accomplished through mechanical deformation of the cavity, which alters the grid spacing and, therefore, the capacitance and resonant frequency. A cross-sectional view of a typical tube of this kind is shown in Fig. 1·20.

A recent development in reflex oscillators is the incorporation of a means for accomplishing the mechanical deformation of an internal cavity by an electronically controlled mechanism. One method consists of the inclusion of a small triode, with a separate cathode, grid, and plate, within the envelope of the oscillator tube. The plate of the triode is made of a bimetal strip, the shape or dimensions of which are determined by its temperature. The temperature is, in turn, controlled by the triode grid voltage which determines the current passing into the plate and, consequently, the power dissipated by it. The plate is so connected to the cavity of the oscillator that the temperature of the plate determines the grid spacing of the cavity and, consequently, the frequency of the oscillator. In this way, electronic tuning over a very wide range—10 per cent or more—has been accomplished through the control of the triode grid, which draws no current. This frequency control cannot be used if the response must be instantaneous, because it involves a thermal time constant. When the triode tuner is used in combination with reflector-voltage control in a frequency-control circuit, however, completely automatic frequency control over a wide region can be accomplished. This subject is discussed in Chap. 7.

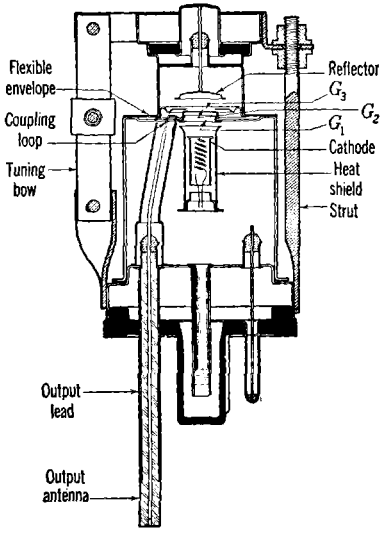

FIG. 1·20.—Cross-sectional view of the 2K25 reflex klystron.

Table 1·1 is a list of some of the tubes available at present which are useful as local oscillators. All but the first of these are reflex klystrons. Information is given concerning the frequency range, beam voltage and current, negative reflector voltage, output power, and the electronic tuning range for a typical tube. These numbers are the average and not the limiting values acceptable under the specifications of the tubes. For the specification limits the manufacturers' technical sheets or the Army-Navy specifications should be consulted. Present manufacturers are listed with the following abbreviations:

BTL.....Bell Telephone Laboratories, 463 West St., New York, N.Y.
WE.....Western Electric Co., 120 Broadway, New York, N.Y.
Sperry.....Sperry Gyroscope Co., Great Neck, N.Y.
Raytheon...Raytheon Manufacturing Co., Waltham, Mass.
RCA.....Radio Corporation of America, Camden, N.J.
GE.....General Electric Co., Schenectady, N.Y.

1·15. Radio-frequency Amplifiers.—It might be wondered whether the superheterodyne receiver could not be improved in noise figure by the addition of a preselecting r-f amplifier. It was pointed out in Sec. 1·9 that the only advantage afforded by preselection alone is the suppression of spurious frequency response, and that the noise figure is changed very little. The preselection can be accomplished without tubes as amplifiers, with only small loss in noise figure, through the use of appropriately selective r-f circuits. This feature is not of importance unless image rejection is needed.

Tubes such as two-cavity klystrons can be used as r-f amplifiers and, in fact, were so used in some of the very early experimental radars in the microwave region. This was done, however, because of the lack of good duplexing components. The minimum detectable signal for the receiver probably was not decreased by their use. These tubes usually have poor noise figures and are now rarely used as r-f amplifiers except at high level for transmitting purposes.

The only other types of amplifier available are the triode and the more complex space-charge tubes. At frequencies of 3000 Mc/sec and below, the 2C40 tube can be used successfully as an r-f amplifier, giving an increasing r-f gain and decreasing noise figure as the frequency is decreased. An effective over-all noise figure, at 700 Mc/sec, of 5 db has been achieved with two such r-f amplifiers in cascade, each tuned, preceding the converter. In view of the fact that a receiver with about the same effective over-all noise figure can be made with a crystal converter, however, it hardly seems worth while to add the complexity of such amplifiers to a receiver, since all such cavity circuits are relatively difficult to tune and power must be provided for the tubes. It is true that excellent image rejection can be achieved with such a receiver, and that the receiver is considerably less susceptible to damage by excessive input power. If these considerations are important, the use of r-f amplifiers may be desirable. The simplicity of tuning and of operation of the crystal converter, without r-f amplifiers, might be considered worth a sacrifice of a few decibels in noise figure. In any event, it is more difficult to maintain a receiver using two r-f amplifiers at its optimum performance, and it is likely that in actual use the simpler crystal converter will have a better noise figure than the amplifiers. When the r-f amplifiers

were first developed they were incorporated in many existing receivers, and improved performance resulted. This was true, however, largely because those receivers had very poor noise figures in comparison with what can now be achieved with the crystal converter.

For use at frequencies of 3000 Mc/sec and higher there are no vacuum tubes commercially available that can be used as r-f amplifiers to give noise figures even comparable with those easily achieved with the crystal converter. A project at the Radiation Laboratory for the development of such a tube led to the construction, by H. V. Neher, of a few experimental models of an amplifier tube for the 3000-Mc/sec region. These are the only tubes known to the author which can be used as r-f amplifiers in receivers with noise figures comparable with those achieved with a crystal converter. These tubes were tetrodes, having a screen grid in addition to the cathode, grid, and plate. The construction was a planes parallel one similar to that of the lighthouse tubes. The resonant cavitie. were built into the tube envelope, which was the size of that of the 6L6 As an example of the extremely fine workmanship involved in them, the fact may be cited that the grid structures were made with wires 0.0002 in. in diameter and spaced 0.001 in. apart. At the time these tubes were first available on a laboratory scale it appeared that some decrease in over-all receiver noise figure would be possible through the use of one as an r-f amplifier with the existing crystal-mixer superheterodyne receivers. Before any large-scale production was accomplished, however, improvement in the crystals available in quantity production and reduced i-f amplifier noise figures had resulted in a smaller noise figure for the simple crystal-mixer superheterodyne receiver than could be achieved with the amplifier tube. The intended production of this tube in factory quantities was consequently dropped to make the production facilities available for more urgently needed devices. The details of the design and results achieved with this tube are described in a Radiation Laboratory report.[1]

1·16. Receivers of Other Types.—Other receivers are sometimes used at lower frequencies. A brief description of them is given to show why they have not as yet been commonly used at microwave frequencies.

Some development work has been done on the design of frequency converters of basic types other than the space-charge tube. Because tubes using accelerated electron beams have largely replaced other types as local oscillators, it might be supposed that some sort of tube using this principle could be designed to solve the mixer problem. Thus far no development along these lines has given results comparable with the crystal mixer, and little need be said about them here. As with the

[1] H. V. Neher, "The Radiation Laboratory S-Band Amplifier," RL Report No. 306, July 10, 1943.

low-level amplifier, the major limitation of beam tubes seems to lie in the excessive noise they introduce. A very large conversion gain would overcome this difficulty, but sufficient conversion gain to achieve noise figures comparable with those of the crystal converter has not yet been obtained. It appears that the limiting frequency of the accelerated-electron-beam tube might be met before that of the crystal mixer. The transit angle of the electron beam must be kept small, as the frequency is increased, either by a corresponding reduction in the grid spacings or by an increase of the velocity of the beam through the use of higher potentials. Both of these expedients make the tube increasingly difficult to build. Although the crystal probably does have an ultimate limiting frequency where transit angles become significant, this frequency has not yet been approached. So far, the application of the crystal mixer has been successfully extended to higher-frequency bands through the use of smaller parts in the cartridge construction and a smaller contact area on the crystal. By this means it has been possible to extend the frequency range of crystal mixers up to 25,000 Mc/sec with almost no sacrifice in noise figure over the best value that can be achieved at the lowest microwave frequencies. The sacrifice that is made in doing this is in the resistance of the unit to damage from high-power signals.

A receiver that has been common in the ultra-high-frequency range is the superregenerative receiver. As a simple receiver, using a minimum number of tubes and having a high sensitivity, it is useful in that frequency range. Because it requires a detector that can be made to oscillate, however, it has not been very extensively used in the microwave region. Lighthouse tubes can be made to oscillate up to 3000 Mc/sec and higher, but the noise figure that can be obtained as a superregenerative detector does not appraoch that of the crystal mixer. Because the output level is high, and, therefore, little amplification is needed, a superregenerative receiver is useful for some applications where the noise figure and bandpass characteristics are of less importance than compactness and small power consumption. No attempt will be made in this volume, however, to describe circuits of this kind, and the reader who is interested in this subject is referred to Vol. 23 where the developments in superregenerative receivers are discussed.

The simple regenerative detector has few advantages over the superregenerative detector and is less reliable and not so simple to operate. Consequently, circuits of this type have received no serious attention as microwave detectors.

An interesting possibility in connection with regenerative and superregenerative receivers for frequencies higher than about 3000 Mc/sec has very recently arisen in connection with a development in crystal rectifier units. It has been discovered that a crystal rectifier unit, designed

by H. Q. North at General Electric Company, which uses a very small welded contact between a germanium-crystal element and a platinum-ruthenium "cat whisker," can be made to show a negative output conductance at the intermediate frequency when placed in a very special microwave circuit, with local-oscillator power incident upon the rectifier unit. The crystal unit used in a superheterodyne converter could therefore be made to oscillate and, consequently, could be used as a regenerative or supperregenerative frequency converter. Attempts to achieve, with this crystal, a better over-all receiver noise figure than can be produced with more conventional crystal mixers have not yet been successful. On the other hand, it may be that the rather large power gain that can be achieved will be of sufficient importance in reducing the required amount of i-f amplification to make some application of this kind worth while. Since this crystal unit is a relatively recent development, it may be that further work will make possible an improved noise figure, although the exploratory measurements showed that the noise figure obtained in the condition of negative i-f conductance was somewhat greater than that for the same crystal operating in the conventional fashion. The noise figure was not, however, so large as for a tube mixer at the same frequency (10,000 Mc/sec). In order to indicate the method in which this unit can be made to act as a regenerative converter, a discussion of frequency conversion by a local oscillator and crystal mixer must first be given. Further reference to this subject will be made in Chap. 2, following the linear-network representation of the crystal mixer. It will be seen that the special tuning conditions necessary in the microwave circuit may render the operation of such a regenerative converter impractical, or at least not worth the decrease obtained in the i-f gain required. Since the subject is in such a rudimentary state of development, no final conclusion can be made, except to say that at the present time there has been no indication of much to be gained with the present crystal units.

CHAPTER 2

CRYSTAL RECTIFIER UNITS

Early in the development of radio communication, the crystal rectifier was used almost universally as a detector for radio signals. After the introduction of the three-element vacuum tube, receivers having crystal detectors were replaced by receivers using vacuum-tube r-f amplifiers, detectors, and audio amplifiers and, finally, by superheterodyne receivers. The performance of receivers having vacuum tubes throughout was very much better than that achieved with the best crystal rectifiers then known. This fact, together with the need for frequent adjustment of the common galena crystal detector led to the complete abandonment of the crystal for use in serious radio practice.

With the extension of radio techniques to higher and higher frequencies, however, complications due to electron transit time, lead inductance and distributed capacitance became apparent. As a result, the crystal rectifier, which can be made in a very small package, has become reinstated. An important reason for the return of the crystal, in addition to the great improvements in its performance which have resulted from intensive research and development during the war, is the fact that the crystal has been widely used as the nonlinear element of a superheterodyne mixer. In this application, the crystal rectifier units now available give mixer noise figures that compare very favorably, even at 25,000 Mc/sec, with those of the best vacuum-tube mixers and converters at low frequencies. Service in mixer circuits places requirements on the characteristics of the rectifier which differ from the requirements imposed in low-level-detector circuits. The major part of recent development has been directed toward the production of units for superheterodyne mixers; however, some units have been designed specifically for use as low-level detectors. Other low-level detectors have been selected by appropriate tests from production-lots of mixer crystals.

It is not the purpose of this volume to consider, in detail, the subject of crystal-rectifier design but, in order to clarify the later material, the present chapter will be devoted to a brief discussion of crystal-rectifier units. A rudimentary discussion of the physical mechanism of the units, and of the linear-network treatment of frequency conversion by the crystal mixer, will be given. This will be followed by sections giving characteristics and Army-Navy specifications of the units com-

mercially available at the time of writing. All of these subjects are treated in greater detail, and more rigorously, in Vol. 15 of this series.

2·1. Physical Description of Rectification.—The electronic theory of matter, applied to crystalline structures, shows that the electrons associated with the atoms of the material possess energies in discrete levels, just as they do in single atoms. In a crystalline solid, however, the coupling among the various constituent atoms or molecules causes the energy levels corresponding to particular quantum numbers in each atom to be split, and a band of very closely spaced levels results. Some bands may overlap, but there are always regions of energy which may be occupied by electrons, and regions between these bands which are forbidden to electrons. In substances made up of moderately heavy atoms, the available energy levels associated with the most tightly bound electrons are completely filled. Above the uppermost completely occupied band there is a band of energy levels that may be either completely empty or partially filled, depending upon the nature of the atoms making up the crystalline solid. For a monovalent alkali metal, for instance, all of the electron shells except the last are completely filled and the energy bands associated with these inner shells are fully occupied when the atoms are in their lowest state. The band associated with the outermost shell, however, is occupied by only one electron per atom and an energy-level diagram for such a substance would be like that shown in Fig. 2·1. The energy difference ϕ_w between the maximum energy of an electron in the material and the energy of an electron outside is the work function for the material, or the minimum energy that must be imparted to an electron to cause it to escape from the material in the absence of thermal energy.

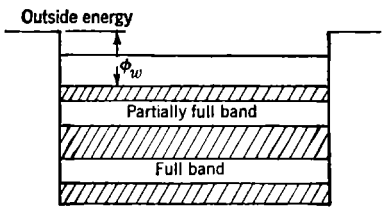

FIG. 2·1.—Electronic energy levels of a metal.

Crystals in which the uppermost occupied bands are completely filled at 0°K and those in which these bands are only partially filled form two fundamentally different classes of materials. Those of the first class are insulators and those of the second, as shown in the diagram, are metals or conductors. If the uppermost band is completely filled, the electrons are not free, and electric conduction cannot take place. Because of the forbidden region between the uppermost filled band and the next higher band, an electron, to become free, must acquire a considerable amount of energy. In a metal, electrons are easily excited into adjacent states within the band itself, where they act as free conduction electrons. "Intrinsic semiconductors," which can be used in crystal-

rectifier units, would be perfect insulators at absolute zero temperature, since at that temperature they possess only completely filled and completely unfilled energy bands. At the temperatures at which they are used, however, the intrinsic semiconductors possess a few conduction electrons in an otherwise empty band. This situation exists because of thermal excitation of electrons from the highest filled band to the next higher band and, therefore, a condition for conduction of this kind is that the forbidden region between the bands have a width not much larger

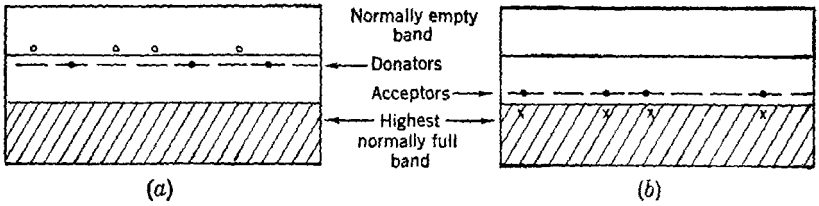

FIG. 2·2.—Energy-level diagram of two types of impurity semiconductors. (a) n-type. (b) p-type.

than kT energy units, where k is Boltzmann's constant and T is the absolute temperature.

In order to facilitate the existence of a few conduction electrons, a semiconductor may contain a very small percentage of an impurity. In fact, this is very difficult to prevent. The impurity centers give rise to conduction, either because electrons normally associated with the impurity atoms, in levels just below the normally vacant band, are thermally excited into the vacant band, or because electrons in the top levels of the highest normally full band are thermally excited into vacant levels associated with the impurity centers. In the latter instance, vacancies are left in the uppermost occupied band and these can conduct. Semiconductors of both these types are called "impurity semiconductors"; those in which the impurity acts as a donator, as shown in Fig. 2·2a, are often called "n-type," whereas those in which it acts as an acceptor for electrons as shown in Fig. 2·2b are called "p-type."

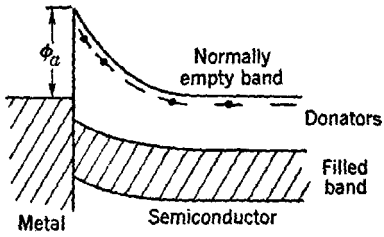

FIG. 2·3.—Energy-level representation of metal-to-semiconductor contact.

A crystal rectifier usually consists of a small contact between a metal whisker and a semiconductor crystal. In view of the foregoing energy-level considerations, the junction between the metal and the semiconductor may be described in terms of the energy-level diagram of Fig. 2·3. The carriers of electric charge will flow from one material to the other

until the energy levels are so altered that equal currents cross the junction in the two directions. By this mechanism, a space charge is produced in the region of the contact. In the metal, this space charge resides in a very thin layer (about 10^{-8} cm) at the boundary, but in the semiconductor the space charge is distributed through a broader region, because the material has a much smaller number of available carriers of current. The thickness of the space-charge layer in the semiconductor can be calculated from a knowledge of the dielectric constant of the semiconductor and the density of the carriers of current far from the boundary. Such calculations show the width of this region in the semiconductor to be of the order of 10^{-6} cm, or about a hundred times the width of that in the metal. A curve of the potential as a function of distance from the boundary has a very steep barrier on the metal side of the junction, in which narrow region the potential rises abruptly by the amount ϕ_a which is the difference between the work functions of the two materials. There is a thin layer near the surface in the semiconductor in which a potential gradient exists because the curve of the potential is less steep. The diagram of Fig. 2·3 applies to contacts for which the work function of the metal is greater than that of the semiconductor.

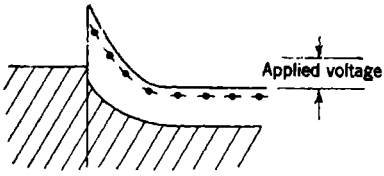

FIG. 2·4.—Metal-to-semiconductor contact with applied voltage in high-resistance direction.

The relative potentials of the levels in the metal and in the semiconductor, when equilibrium is established, can be shown to be such that the top of the filled region in the metal is at a potential approximately half way between the donator level and the bottom of the vacant band in an n-type semiconductor. This is the type of contact to which Fig. 2·3 applies.

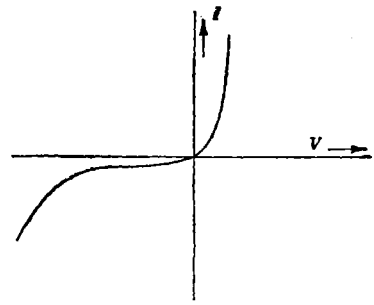

FIG. 2·5.—Direct-current—voltage relation for crystal contact.

If the equilibrium potentials are altered by the application of a voltage between the metal and the semiconductor, the shape of the potential barrier is altered. When the semiconductor is made positive with respect to the metal, the levels in the semiconductor are depressed with respect to those in the metal, as shown in Fig. 2·4. The potential barrier, which may be considered as a thin layer having a high resistance because of a dearth of free electrons, is enhanced and, consequently, it has

a still higher resistance to the flow of electric current. The amount of resistance rises if the applied voltage is increased. A limit to the rise is reached when electrons from the metal begin to tunnel through the barrier in a manner analogous to that of field emmission. A curve showing the current passed through the contact as a function of the applied voltage, with the semiconductor positive, is therefore, similar to the left half of Fig. 2·5.

Application of a voltage of the other sign across the contact reduces the insulating effect of the potential barrier by raising the potentials in the semiconductor relative to those in the metal, as shown in Fig. 2·6. The effective resistance of the contact decreases until the voltage is reached for which the insulating layer no longer exists, as in Fig. 2·7. The resistance of a contact at this voltage and higher is primarily what is called the "spreading resistance," which is determined by the area of the contact and the bulk resistivity of the semiconductor. In the semi-

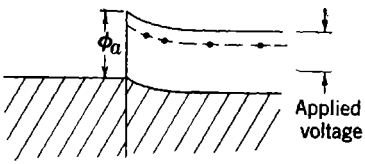

FIG. 2·6.—Metal-to-semiconductor contact with applied voltage in direction of large current flow.

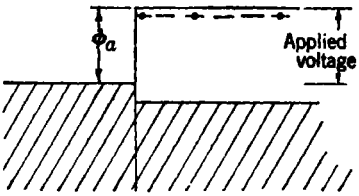

FIG. 2·7.—Energy-level diagram with applied voltage corresponding to linear part of high-current characteristic.

conductor, only a small cross-sectional area near the small contact is effective for carrying the current, but inside the semiconductor the effective area rapidly increases with distance from the surface. The right-hand side of Fig. 2·5 shows the current as a function of an applied voltage of this sign (semiconductor negative). The steepest slope of the straight part of the curve is a measure of the spreading resistance.

From this description it can be seen that a nonlinear current-voltage relationship exists for a metal-to-semiconductor contact. The device cannot be used as a rectifier unless a voltage can be applied across the contact. It might be argued that the second contact this requires would exhibit characteristics that are the reverse of those of the first contact and that the net effect would be a linear resistance. This would indeed be so if the two metals were the same, and if identical contact areas were used. The rectifying junction results when the connection to the back of the semiconductor is made through a very much larger area. This back contact could indeed be nonlinear in the reverse sense to the small contact, with respect to voltages applied to the unit, but, because the area is large, the resistance of the barrier layer is very small, even

E. G. & G. LIBRARY
LAS VEGAS BRANCH

compared with the spreading resistance for the small contact. The d-c characteristics of a crystal rectifier unit, therefore, do resemble Fig. 2·5, and the effect of the back contact can be entirely neglected.

In practice, the crystals used for microwave work are usually made of silicon in which has been dissolved a small amount of aluminum, which acts as the acceptor impurity for a *p*-type semiconductor. The back contact is made by soldering the piece of crystal into a cartridge unit, as sketched in Fig. 2·8, and the small metal contact is made by light pressure of a tungsten whisker, carefully prepared with a very small point. The research and development work that has been done toward the perfection of techniques for the production of these units is described in Vol. 15 of this series, to which reference has already been made. Considerable work has been done toward perfecting crystals with germanium semiconductors but these have not yet been widely used in microwave applications. The same principles are involved in the construction of microwave circuits for the use of such units and, in fact, the design of circuits for crystal units of any type could follow the general methods to be outlined in the following chapters of this book. Specific designs may have to be altered in details for the best utilization of crystals of other types, but this can be done if the pertinent characteristics of the units to be used are known.

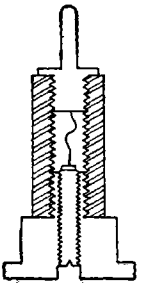

FIG. 2·8.—Typical crystal-rectifier unit.

2·2. High-frequency Effects in Crystal Rectifiers.—The deterioration of the performance of vacuum tubes at high frequencies is a result of their large physical size. The crystal rectifier can be made very much smaller because of its inherent simplicity and, therefore, proper design of the cartridge allows the effects of lead inductance and distributed capacitance to be neglected at very much higher frequencies than for any vacuum tubes so far constructed. Since only the barrier region in the semiconductor is effective in producing the nonlinear characteristic, the device could theoretically be made microscopic in size. In practice, of course, considerable skill is required to assemble the small parts. Also, to achieve a whisker contact that has an appropriate area and that will remain stable, some spring action in the whisker is required.

The quantity in the crystal-rectifier unit analogous to the interelectrode spacings of a vacuum tube is the thickness of the barrier layer. The carriers of electric charge must be able to cross this barrier in a time short compared with a quarter cycle of the applied r-f voltage if the high-frequency behavior is to be simply related to the d-c characteristic shown in Fig. 2·5. Since this barrier thickness is of the order of 10^{-6} cm, it is obvious that transit-time effects may be neglected at very much

higher frequencies than would be possible in any device in which an interelectrode gap must be obtained by mechanical means.

A simple equivalent circuit for the crystal-rectifier unit, exclusive of the transformation effects of the cartridge, may be used for illustrative purposes. Such a circuit, shown in Fig. 2·9, includes the nonlinear resistance R of the barrier, a linear resistance R_b equal to the spreading resistance, as measured by the linear part of the d-c characteristic, and a capacitance C shunted across the nonlinear resistance. This capacitance arises because the barrier layer, although it has very small conductivity, does have a considerable dielectric constant, and it can be shown that the effect on an applied r-f voltage is similar to that of a small condenser shunted across the barrier region. The magnitude of this capacitance is not independent of the applied voltage because the effective thickness of the barrier varies somewhat with the value of the applied voltage. For most purposes, however, the capacitance may be regarded as fixed.

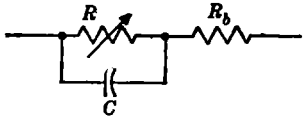

FIG. 2·9.—Equivalent circuit for crystal rectifier.

Because of the presence of the spreading resistance R_b, the capacitance of the contact cannot be resonated out by an external inductance and, consequently, this capacitance has a real effect upon the high-frequency behavior of the crystal rectifier. The capacitance acts as a shunt that lowers the effective impedance of the barrier at high frequencies. Since its presence has the greatest effect for the highest barrier resistance, the nonlinearity of the resistance, on which the usefulness of the crystal unit depends, is reduced.

A voltage applied to the crystal in the direction of high resistance is said to be applied in the backward direction, and one in the low-resistance direction is called a forward voltage. The ratio of the voltage to the current for a backward voltage is called the back resistance and for a forward voltage the front resistance. Because of the barrier capacitance, the ratio of the back to front resistances is not so significant, as a measure of the quality of the crystal, as it would be if there were no capacitance present. Since the capacitance increases with increasing contact area, it is important that the area of the contact be kept as small as is compatible with other requirements. This is one of the reasons for the care with which the whisker is prepared and brought into contact with the semiconductor. The small contact area used is produced by the flattening of the whisker which occurs if a small force is applied across the contact. Crystals designed for the highest frequencies usually have a smaller force applied to the whisker and have, consequently, smaller areas of contact than those designed for lower frequencies. By this means, it has been found possible to maintain about the same sensitivity

over the microwave range, but the higher-frequency units are, consequently, mechanically and electrically less rugged.

The back resistance of a microwave rectifier unit can be used as a measure of its quality, provided that a lower limit for the value of the back resistance of acceptable units of the same type is known. By statistical studies, it has been found that a lower limit to the back resistance of crystals of a given type, measured at a given applied voltage, can be set. Crystals of that type which have back resistances below this limit are probably damaged, whereas those having resistances above the limit are almost certainly still acceptable. The measurement of the back resistance at the given voltage is a test by which it is possible to eliminate practically all inferior units at the expense of losing some acceptable ones. In view of the difficulty of measuring, directly, the quality of a crystal, and in view of the large numbers of crystals available, such a loss has been considered a small price to pay for simplicity of testing the crystals.

The back resistance of a crystal unit that is in electrical use may become lower over a period of time. Such a change has more significance than the absolute value of the back resistance at any one time. Any change in the back resistance must mean a change in the contact or in the semiconductor and should, therefore, be looked upon with suspicion. In the past, a lack of realization of the significance of the back resistance or of a change in it has led to the continued use of damaged crystals in receivers. Because of the simplicity of a back-resistance test the importance of performing it at frequent intervals, if high-quality performance is to be maintained, cannot be overemphasized. Limiting values of the back resistance for crystals of various types are included in a table at the end of this chapter.

2·3. Figure of Merit of Crystal-video Receivers.—In Secs. 1·5 to 1·7, a discussion of the quality of a receiver with a low-level detector was given. For completeness, this discussion should include the definition and method of measurement of the "figure of merit," which is used as a measure of the quality of crystal detectors available commercially. In order to correlate the figure of merit with the minimum signal detectable by a receiver consisting of a low-level detector and an amplifier, it is necessary to have the definition include a parameter that takes into account the noise power arising in the amplifier. Two crystal detectors that are identical in performance when used with a noise-free amplifier do not necessarily make equally sensitive receivers when used with practical amplifiers. Therefore, the figure of merit of a crystal detector is a quantity that is related to the quality of the over-all receiver, when a typical video amplifier follows the detector.

As stated in Sec. 1·6, a crystal upon which a signal is incident may be

represented, at the output terminals, by a current generator i in shunt with a conductance equal to that measured between these output terminals. It has been found that the noise generated in a video amplifier can be represented as the noise of a resistance between the grid of a perfect amplifier and the input terminal, as shown in Fig. 2·10. Over a wide range of impedances across the input terminals, the noise power available at the output terminals of the amplifier, in excess of that arising from the circuit connected across the input terminals, can be considered as arising as Johnson noise in this series resistor. The entire circuit at the amplifier input terminals may then be represented by Fig. 2·11, where R is the resistance of the output terminals of the crystal detector and R_A is the equivalent noise resistance of the amplifier tube. The relation

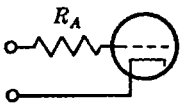

FIG. 2·10.—Equivalent circuit of first amplifier tube with noise resistance.

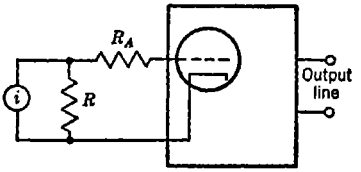

FIG. 2·11.—Modulation-frequency circuit of low-level detector.

between the output voltage E of the amplifier, caused by an r-f signal, and the r-f signal power P is

$$E = \frac{P}{b} RA, \tag{1}$$

where b is the proportionality constant defined in Sec. 1·7 and A is the voltage gain of the amplifier. Since the rms output noise voltage of the amplifier now originates completely as Johnson noise in the two resistors R and R_A, its value is

$$\bar{N} = A\sqrt{4kTB(R + R_A)}, \tag{2}$$

where B is the equivalent noise bandwidth of the receiver, as defined in Sec. 1·4, and the remaining symbols have the same significance as previously stated. The signal-to-noise ratio at the output terminals of the receiver is thus given by the ratio of Eq. (1) to Eq. (2),

$$\frac{E}{\bar{N}} = \frac{P}{\sqrt{4kTB}} \cdot \frac{R}{b\sqrt{R + R_A}}. \tag{3}$$

The right-hand side of Eq. (3) has been divided into two factors, the second of which includes the quantities descriptive of the detector. This quantity,

$$\frac{R}{b\sqrt{R + R_A}} \tag{3a}$$

is called the figure of merit of the video crystal and has been used to evaluate the acceptability of production crystal units intended for use as low-level detectors.

Before the figure of merit may be evaluated from measurements of the quantities b and R for the crystal, the value of R_A must be known. This value is, of course, dependent upon the particular amplifier tube and varies somewhat among specimens of the same type and widely among different types. The amplifier tube most commonly used in video receivers that have crystal detectors is the 6AC7 tube in pentode connection. Tubes of this type have been shown by measurement to have equivalent noise generating resistances of 1000 to 1200 ohms. The Army-Navy specifications, under which the various types of video crystals have been produced and tested, are based on calculations for the figure of merit in which the value for R_A, in Eq. (3a), is taken to be 1200 ohms.

At the end of this chapter is a list of the various types of crystals for which Army-Navy specifications existed at the time of writing. Included in the list are several types of low-level detector crystals, designed for specific frequency regions as indicated in the table. It will be observed that these so-called video crystals have, in addition to a specification of figure of merit, a definite minimum or maximum value of output resistance. The resistance of the crystal determines the bandwidth of the first circuit of the amplifier, because the capacitance of this circuit is largely outside the control of the designer. If the resistance becomes too great, the pass band of the amplifier becomes too narrow; therefore, the receiver does not respond properly to signals of the type for which it was designed.

2·4. The Crystal Converter.—The crystal rectifier, when used as a frequency converter, is operated under conditions rather different from those in the low-level-detector application. For this reason, an entirely different set of parameters are used for the evalutaion of the quality of a unit intended for use as a frequency converter. This can be seen from a simplified consideration of the mechanism of rectification based on the d-c characteristic of Fig. 2·5. Although an analysis based upon the d-c characteristic gives a poor picture of the microwave behavior of the contact as a frequency converter, because of the barrier capacitance, it does serve as a qualitative description.

In Fig. 2·12, a typical d-c characteristic is drawn. In addition, there is shown, as a function of time along the negative ordinate axis, a voltage corresponding to the superposition of the local-oscillator voltage upon a small signal voltage. The output terminals of a crystal mixer are so arranged that no microwave-frequency components of the current in the crystal appear at them. The output terminals carry only the direct-

current and the beat-frequency components, as indicated by the curve representing this current as a function of time plotted along the right-hand part of the horizontal axis. The magnitude of the beat-frequency component in this current is related to the efficiency of the device as a frequency converter. From the diagram it is evident that the magnitude of this beat-frequency component depends primarily upon the ratio of the slopes of the d-c characteristic at the negative peak and at the positive peak of the local-oscillator voltage. It is apparent that the curvature of the characteristic in the vicinity of the origin is of little direct importance compared with the ratio of what might be called the differential impedances at two points symmetrically chosen at some distance on either side of the axis. From this consideration, it would be expected that the crystal rectifiers that make the best low-level detectors do not necessarily make the best units for use as frequency converters, and vice versa.

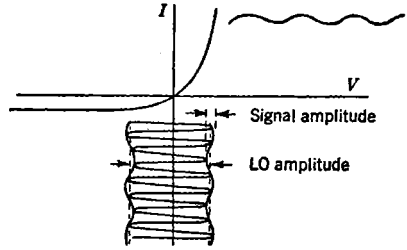

FIG. 2·12.—Graphical illustration of frequency conversion on basis of d-c characteristic of crystal.

Another significant relationship that can be qualitatively determined from this simple analysis is the dependence of the conversion efficiency on the magnitude of the local-oscillator voltage applied. If the signal voltage is kept small compared with that of the local oscillator but of constant magnitude, and the amplitude of the local-oscillator voltage is varied, the magnitude of the modulation component in the linear superposition of the two voltages remains constant. Because of the curvature of the d-c characteristic, particularly on the positive side of zero voltage, the ratio of the differential impedances on the two sides diminishes with decreasing local-oscillator voltage and, as a result, the conversion efficiency of the device should be less with small local-oscillator amplitudes than with large amplitudes. The conversion efficiency, plotted as a function of the local-oscillator power, may be expected to behave as in Fig. 2·13, where the abscissa is the local-oscillator power and the ordinate is the relative conversion efficiency. There is no longer any significant increase if the local-oscillator power is increased beyond that which utilizes the straight portion of the d-c characteristic in the

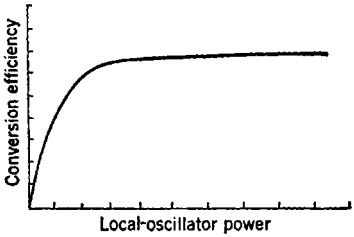

FIG. 2·13.—Typical curve for conversion efficiency vs. local-oscillator drive.

forward direction. At larger amplitudes, there may even be a decrease, because the differential back resistance may decrease. This situation has not been indicated, however, in either Fig. 2·12 or Fig. 2·13.

The conversion efficiency is usually specified as the gain of the converter unit, considered as a network, between the signal input terminals and the i-f output terminals. This gain, as defined in Sec. 1·4, is the ratio of the available i-f output power to the available signal input power, and, for a crystal converter, it is almost certainly less than one. Consequently, it has become customary to use the reciprocal of the gain, called the "loss" L of the converter and to express it in decibels. In order to specify completely the quality of the converter, it is necessary to know the value of the output noise power from the converter, considered as a network, as discussed in Sec. 1·4. From these two quantities, the effective over-all noise figure of a receiver in which such a converter is used in conjunction with an i-f amplifier of known effective noise figure may be estimated. The noise temperature t, as defined in Sec. 1·4, has been most commonly used as a measure of the noise. In order to specify the local-oscillator power for optimum effective over-all noise figure, it is necessary to know both the dependence of the noise temperature of the crystal on the local-oscillator power and the noise figure of the i-f amplifier for a generator impedance equal to the impedance of the output terminals of the crystal converter. This impedance also depends somewhat on the local-oscillator power, although it varies only slowly for local-oscillator drive sufficient to give a conversion gain near the maximum.

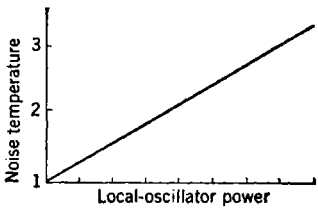

FIG. 2·14.—Typical curve of mixer noise temperature vs. local-oscillator drive.

The noise temperature of a crystal converter is found to be approximately linearly dependent upon the incident local-oscillator power, as indicated in Fig. 2·14. Equation (1·26) may be used to calculate the effective over-all noise figure if F_2^*, the effective noise figure of the i-f amplifier, is known for the range of output impedances possessed by the crystal converter. Since the over-all noise figure is usually expressed in decibels and since the loss L, also usually expressed in decibels, is used instead of the gain, this equation may be rewritten as

$$F_{1+2\ db}^* = L_{db} + 10 \log_{10} (F_2^* + t - 1), \tag{4}$$

where t and F_2^* are numerical ratios, not expressed in decibels. Figure 2·15 shows a typical curve of the effective over-all noise figure of a receiver resulting from the combination of the three quantities in Eq. (4). It will

be observed that the noise figure decreases in about the same way as the conversion efficiency increases, for small local-oscillator power. For high local-oscillator power, the conversion efficiency no longer increases so rapidly but the noise temperature continues to increase; therefore the over-all noise figure goes through a minimum value and then increases again. The noise figure does not vary rapidly in the region of the minimum value and, therefore, a reasonably large deviation in local-oscillator power from the optimum value can be tolerated. The optimum local-oscillator power is usually about 0.5 mw into the crystal, which results in a continuous rectified crystal current of about 0.5 ma. More specific information about conversion losses and noise temperatures, as well as about i-f impedances of typical units, will be given in later sections of this chapter.

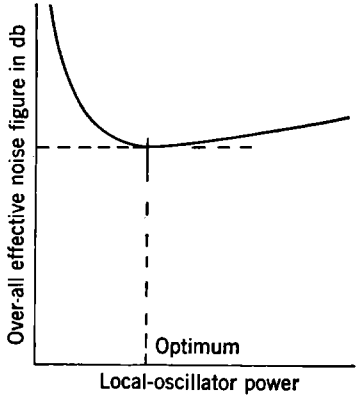

FIG. 2·15.—Over-all noise figure vs. local-oscillator drive.

2·5. Linear-network Representation of the Crystal Converter.—The use of the terms loss and noise temperature, to describe the crystal frequency converter, suggests that the device may be considered as a network that possesses two pairs of terminals: one pair to which the signal is applied, and one pair from which the i-f signal is obtained. Although the converter depends for its action upon the nonlinear relationship between voltage and current in the crystal unit, a linear relationship exists between the i-f output voltage and the microwave input signal voltage, provided the signal amplitude is very small compared with that of the local oscillator. This is true because the voltage-to-current relationships of the crystal, which are effective for the conversion from the signal frequency to the intermediate frequency, are differentials of the d-c and r-f characteristics, and these may be regarded as constant for very small signal amplitudes and for a given local-oscillator power. The converter may then be regarded as a box containing a pair of signal terminals and a pair of output terminals for the i-f voltages, as indicated in Fig. 2·16. A considerable number of relationships that help to clarify the complex behavior of crystal converter units can be derived from this representation.

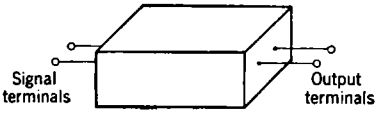

FIG. 2·16.—Symbolic representation of crystal converter.

It might be wondered what would result if the device were worked

backward. If an i-f voltage were impressed upon the i-f terminals, would an r-f signal be produced at the signal terminals? A return to a consideration of the d-c characteristic will help to answer this question. If, as in Fig. 2·17, the local-oscillator voltage is impressed upon the crystal, in the absence of an r-f or an i-f signal, and a d-c bias is added in series with the crystal, then the operating point shifts, with the result that a different part of the characteristic determines the r-f impedance of the crystal. If the bias voltage is made to vary through zero sinusoidally at the i-f frequency, the effect is to modulate the r-f impedance of the crystal at the i-f frequency or, in other words, to amplitude-modulate the r-f current in the crystal. It is well known that an amplitude-modulated r-f current or voltage may be considered as equivalent to the unmodulated current or voltage plus two other r-f components, one above the original frequency and one below it. These two added components differ in frequency from the incident radio frequency by an amount equal to the modulation frequency. In the crystal converter, where the modulating voltage is supposed to be at the intermediate frequency, one of these new radio frequencies will correspond to the signal frequency and the other to the image frequency. When an i-f voltage is applied to the i-f terminals of the converter of Fig. 2·16, voltages of equal magnitude, at the signal and the image frequencies, appear at the r-f terminals. This assumes, of course, that there is contained in the box between the crystal and the input terminals nothing that is sufficiently selective with respect to frequency to favor one of these voltages over the other.

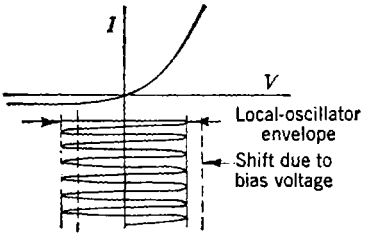

FIG. 2·17.—Graphical illustration of effect of bias voltage on r-f admittance.

To return to the use of the converter in the direction for which it was intended, the application of a signal voltage to the input terminals gives rise to an i-f voltage at the output terminals. This voltage in turn produces, at the input terminals, a voltage at the signal frequency and one at the image frequency. The presence of the signal-frequency voltage serves only to determine, in part, the signal-frequency impedance of the converter, but the image-frequency voltage has considerable significance. It is clear that the behavior of the converter cannot be independent of the image-frequency impedance of the generator circuit connected to the input terminals; a reflection of the image-frequency wave from the generator back into the converter unit will produce a voltage at the intermediate frequency. The phase and amplitude of this intermediate-frequency component, relative to the one produced directly

by the signal, is dependent on the phase and amplitude of the reflected image-frequency wave. The signal-frequency impedance, the output impedance and the conversion loss must all be dependent, to some degree, upon the impedance presented by the generator circuit to the image-frequency wave.

Because the crystal is a nonlinear element, there must be developed, in addition to these voltages, many other higher-order components corresponding to harmonics and products, sums, and differences of these components. A rigorous analytical treatment of the device must include all of these components as well as the image voltage. In addition to the process just described, the image-frequency voltage may be developed as the difference frequency between the second harmonics of the local-oscillator frequency and the signal frequency. The effects of the higher-order frequencies, however, are smaller than those produced by alterations in the crystal impedance. They are, moreover, analytically and experimentally, very much more difficult to handle. To estimate the effects of these voltages, it is useful to consider the image frequency alone because it is probably of the greatest importance, and relatively simple experiments can be made to verify the analytical predictions. The effect of varying the impedances presented to the higher-order frequency components, such as the second harmonics, may be anticipated to be qualitatively similar, but less pronounced.

2·6. The Three-terminal-pair-network Representation.—Let us suppose that the only voltages of significance in the converter circuit are those at the signal, image, and intermediate frequencies. Although the first two of these appear on the input terminals of Fig. 2·16, it is convenient to assume that there exist separate terminals for them, as shown in Fig. 2·18. This could be achieved in practice by an appropriate splitting network, composed of frequency-selective circuits, within the box. A three-terminal-pair network, in which the voltages and currents are linearly related, as they are for small voltages in the crystal converter, may be described by a set of three transformation equations involving a total of nine independent coefficients characteristic of the network. Because of the symmetry between the signal- and image-frequency components in the converter, assuming the converter to have a low Q in terms of the frequency difference involved, the number of independent coefficients may be reduced to five, provided the equations take account of the phase relation between the signal- and image-frequency components. These equations may be written as,

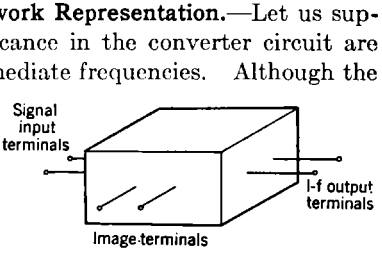

FIG. 2·18.—Symbolic representation of converter with separate signal- and image-frequency terminals.

$$\begin{aligned} i_\alpha &= y_{\alpha\alpha}e_\alpha + y_{\alpha\beta}e_\beta + y_{\alpha\gamma}e_\gamma^*, \\ i_\beta &= y_{\beta\alpha}e_\alpha + y_{\beta\beta}e_\beta + y_{\beta\alpha}^*e_\gamma^*, \\ i_\gamma^* &= y_{\alpha\gamma}^*e_\gamma + y_{\alpha\beta}^*e_\beta + y_{\alpha\alpha}^*e_\gamma^*, \end{aligned} \tag{5}$$

where the subscripts $_\alpha$, $_\beta$, and $_\gamma$ refer respectively to the signal, intermediate, and image frequencies, and the asterisks denote the complex conjugates. The i-f current due to the image-frequency voltage e_γ has a value that is the complex conjugate of that produced by the signal voltage. Therefore the complex conjugate of the term $y_{\beta\alpha}e_\gamma$ is taken, in the second equation, to be the contribution of the image-frequency voltage to the total i-f current. For this reason, the complex conjugate of the image voltage is used throughout, and the third equation gives the complex conjugate of the image-frequency current.

If the image terminals are connected, independently of the signal terminals, to an external admittance y_γ, the relationship between the image-frequency current and voltage is

$$\frac{i_\gamma}{e_\gamma} = -y_\gamma \tag{6}$$

If this expression is substituted into Eqs. (5), and if e_γ and i_γ are eliminated between the resulting equations, the relations between the voltage and currents at the signal and intermediate frequencies become

$$\left.\begin{aligned} i_\alpha &= Y_{\alpha\alpha}e_\alpha + Y_{\alpha\beta}e_\beta \\ i_\beta &= Y_{\beta\alpha}e_\alpha + Y_{\beta\beta}e_\beta \end{aligned}\right\}, \tag{7}$$

where

$$Y_{\alpha\alpha} = y_{\alpha\alpha} - \frac{y_{\alpha\gamma}\,y_{\alpha\gamma}^*}{y_\gamma^* + y_{\alpha\alpha}^*}, \tag{8}$$

$$Y_{\alpha\beta} = y_{\alpha\beta} - \frac{y_{\alpha\gamma}\,y_{\alpha\beta}^*}{y_\gamma^* + y_{\alpha\alpha}^*}, \tag{9}$$

$$Y_{\beta\alpha} = y_{\beta\alpha} - \frac{y_{\beta\alpha}\,y_{\alpha\gamma}^*}{y_\gamma^* + y_{\alpha\alpha}^*}, \tag{10}$$

$$Y_{\beta\beta} = y_{\beta\beta} - \frac{y_{\beta\alpha}\,y_{\alpha\beta}^*}{y_\gamma^* + y_{\alpha\alpha}^*}. \tag{11}$$

Equations (7) show, through their dependence upon the image termination y_γ, that the behavior of the device as a converter from signal to image frequency cannot be specified independently of the treatment of the image-frequency component. Specifically, the conversion loss, the signal input admittance and the i-f output admittance can all be calculated from Eqs. (7) in terms of $Y_{\alpha\alpha}$, $Y_{\alpha\beta}$, $Y_{\beta\alpha}$, and $Y_{\beta\beta}$, plus the signal-generator admittance y_α and the i-f load admittance at the output terminals, y_β.

To find the signal input admittance Y_α for an i-f load admittance y_β, Eqs. (7) may be written as,

$$\begin{aligned}(Y_{\alpha\alpha} - Y_\alpha)e_\alpha + Y_{\alpha\beta}e_\beta &= 0,\\ Y_{\beta\alpha}e_\alpha + (Y_{\beta\beta} + y_\beta)e_\beta &= 0,\end{aligned} \tag{12}$$

where

$$Y_\alpha = \frac{i_\alpha}{e_\alpha} \text{ and } y_\beta = -\frac{i_\beta}{e_\beta}. \tag{13}$$

To be consistent, the determinant of these equations must vanish, or,

$$Y_\alpha = Y_{\alpha\alpha} - \frac{Y_{\alpha\beta}Y_{\beta\alpha}}{y_\beta + Y_{\beta\beta}}. \tag{14}$$

The i-f output admittance Y_β, by analogous steps may be shown to depend upon the signal-generator admittance y_α, as

$$Y_\beta = Y_{\beta\beta} - \frac{Y_{\alpha\beta}Y_{\beta\alpha}}{Y_{\alpha\alpha} + y_\alpha}. \tag{15}$$

These two relations, Eqs. (14) and (15), reveal a point about the design of crystal mixer circuits which must not be overlooked if the best possible performance from a given crystal unit is to be obtained. The choice of the r-f and i-f matching conditions cannot be considered to be independent or to be completely a property of the crystal alone. Because of the interdependence, the design of the input circuit of the i-f amplifier should take into account the effect on the i-f output characteristics of the signal-frequency and image-frequency admittances that are connected to the r-f terminals of the converter. In turn, the signal- frequency admittance of the converter is dependent both upon the i-f load admittance presented to the converter by the i-f amplifier and upon the admittance presented to the converter at the image frequency. If the image-frequency termination is fixed, the coefficients of Eqs. (7) may be regarded as constants descriptive of a particular converter unit. There is, therefore, a great similarity between the converter and an ordinary piece of transmission line, with respect to the dependence on the signal-generator and output-load admittances. In the representation of a transmission line by equations analogous to Eqs. (7), it can be shown that the transfer admittances analogous to $Y_{\alpha\beta}$ and $Y_{\beta\alpha}$ must be equal. That this is also true for the network representing the crystal converter cannot be proved without making some restrictive assumptions.

Dicke[1] has shown that, if certain assumptions about the time dependence of the voltage across the barrier in a crystal rectifier unit are true, a relation between $Y_{\alpha\beta}$ and $Y_{\beta\alpha}$ exists such that

$$|Y_{\alpha\beta}| = |Y_{\beta\alpha}|.$$

[1] R. H. Dicke, "A Reciprocity Theorem and Its Application to Measurement of Gain of Microwave Crystal Mixers," RL Report No. 300, Apr. 13, 1943.

On the basis of this relation, the conversion loss of a crystal converter can be calculated from measured values of the signal or i-f admittances of the converter, for each of several different admittances connected to the other pair of terminals. Comparisons have been made between the values of the conversion loss found in this way and the values measured on the same units by the standard method that involves the measurement of the ratio of the available input power to output power. It is found that the reciprocity condition holds very closely for silicon crystals, but that it does not hold for germanium crystals. If this condition is not obeyed, the efficiency of conversion of r-f power to i-f power is not the same as that from i-f power to r-f power. It has been found that units that do not obey the reciprocity condition are usually more efficient as converters from low to high frequency than in the opposite sense. The agreement between the measured conversion loss and that calculated from the admittance data, for silicon units, is excellent confirmation of the usefulness of the linear-network representation of the crystal converter. Even for units that do not show reciprocity, the same qualitative interdependence of r-f and i-f admittances is found.

The conversion loss of the converter in terms of the parameters of Eqs. (7) may be derived in the following way. The output power from the converter unit is the real part of $-\frac{1}{2}i_\beta e_\beta^*$, whereas the power entering the unit is the real part of $\frac{1}{2}i_\alpha e_\alpha^*$; therefore the loss is

$$L = -\frac{Re(\frac{1}{2}i_\alpha e_\alpha^*)}{Re(\frac{1}{2}i_\beta e_\beta^*)}, \tag{16}$$

which, by Eq. (13), becomes

$$L = \frac{G_\alpha}{g_\beta}\left|\frac{e_\alpha}{e_\beta}\right|^2. \tag{17}$$

Here, G_α and g_β are the real parts, or conductance parts, of Y_α and y_β, respectively. If the second of Eqs. (12) is solved for $|e_\alpha/e_\beta|$ and the solution substituted in Eq. (17), the expression for the loss becomes

$$L = \frac{G_\alpha}{g_\beta}\frac{|Y_{\beta\beta} + y_\beta|^2}{|Y_{\beta\alpha}|^2}. \tag{18}$$

If the value of G_α from Eq. (14) is substituted in this expression, the loss becomes

$$L = \frac{G_{\alpha\alpha} - Re\left(\dfrac{Y_{\alpha\beta}Y_{\beta\alpha}}{Y_{\beta\beta} + y_\beta}\right)}{g_\beta}\frac{|Y_{\beta\beta} + y_\beta|^2}{|Y_{\beta\alpha}|^2} \tag{19}$$

where $G_{\alpha\alpha}$ is the real part of $Y_{\alpha\alpha}$. This may be written in the form

$$L = \frac{G_{\alpha\alpha}}{g_\beta |Y_{\beta\alpha}|^2} \left[(G_{\beta\beta} + g_\beta)^2 - \frac{G_{\alpha\beta\beta\alpha}}{G_{\alpha\alpha}} (G_{\beta\beta} + g_\beta) + (B_{\beta\beta} + b_\beta)^2 - \frac{B_{\alpha\beta\beta\alpha}}{G_{\alpha\alpha}} (B_{\beta\beta} + b_\beta) \right]. \quad (20)$$

where the G's and B's are the real parts and imaginary parts of the Y's with the same subscripts. In addition, $G_{\alpha\beta\beta\alpha}$ and $B_{\alpha\beta\beta\alpha}$ are, respectively, the real and imaginary parts of $Y_{\alpha\beta} Y_{\beta\alpha}$. The gain of the network which appears in the expression for the effective over-all noise figure of a cascade of networks, is defined (see Sec. 1·7) as the ratio of the signal power available from the network to that available from the signal generator connected to the input terminals of the network. The full power available from the converter is obtained when the load admittance y_β is so chosen that the loss L is a minimum. There are two orthogonal quantities, g_β and b_β, in Eq. (20) which must be adjusted to make L a minimum. The quantity b_β can be given any value from plus to minus infinity. The minimum of L will occur for a minimum of

$$(B_{\beta\beta} + b_\beta)^2 - \frac{B_{\alpha\beta\beta\alpha}}{G_{\alpha\alpha}} (B_{\beta\beta} + b_\beta), \quad (21)$$

which is obtained when

$$B_{\beta\beta} + b_\beta = \frac{B_{\alpha\beta\beta\alpha}}{2G_{\alpha\alpha}}, \quad (22)$$

as is evident if the derivative of Eq. (21) with respect to $(B_{\beta\beta} + b_\beta)$ is set equal to zero. Thus Eq. (20) becomes

$$L = \frac{G_{\alpha\alpha}}{g_\beta |Y_{\beta\alpha}|^2} \left[(G_{\beta\beta} + g_\beta)^2 - \frac{G_{\alpha\beta\beta\alpha}}{G_{\alpha\alpha}} (G_{\beta\beta} + g_\beta) - \left(\frac{B_{\alpha\beta\beta\alpha}}{2G_{\alpha\alpha}} \right)^2 \right]. \quad (23)$$

If the partial derivative of L with respect to g_β is taken, the value of g_β resulting in minimum loss can be found to be

$$g_\beta = \left[G_{\beta\beta}^2 - \frac{G_{\alpha\beta\beta\alpha} G_{\beta\beta}}{G_{\alpha\alpha}} - \left(\frac{B_{\alpha\beta\beta\alpha}}{2G_{\alpha\alpha}} \right)^2 \right]^{1/2}, \quad (24)$$

where only the positive root has physical significance. The optimum load admittance, from the combination of Eqs. (22) and (24), is

$$y_\beta = \left[G_{\beta\beta}^2 - \frac{G_{\alpha\beta\beta\alpha} G_{\beta\beta}}{G_{\alpha\alpha}} - \left(\frac{B_{\alpha\beta\beta\alpha}}{2G_{\alpha\alpha}} \right)^2 \right]^{1/2} + j \left(\frac{B_{\alpha\beta\beta\alpha}}{2G_{\alpha\alpha}} - B_{\beta\beta} \right). \quad (25)$$

Upon substitution of Eq. (24) into Eq. (23), the expression for the minimum loss becomes

$$L = \frac{G_{\alpha\alpha}}{|Y_{\beta\alpha}|^2} 2 \left\{ G_{\beta\beta} - \frac{G_{\alpha\beta\beta\alpha}}{2G_{\alpha\alpha}} + \left[G_{\beta\beta}^2 - \frac{G_{\alpha\beta\beta\alpha} G_{\beta\beta}}{G_{\alpha\alpha}} - \left(\frac{B_{\alpha\beta\beta\alpha}}{2G_{\alpha\alpha}} \right)^2 \right]^{1/2} \right\} \quad (26)$$

By algebraic manipulation, Eq. (26) can be put into the form

$$L = \frac{|Y_{\alpha\beta}|}{|Y_{\beta\alpha}|}\left(\frac{1 + \sqrt{1 - \epsilon}}{1 - \sqrt{1 - \epsilon}}\right), \tag{27}$$

where ϵ is given by

$$\epsilon = \frac{2|Y_{\alpha\beta}Y|_{\beta\alpha}}{2G_{\alpha\alpha}G_{\beta\beta} - G_{\alpha\beta\beta\alpha} + |Y_{\alpha\beta}Y_{\beta\alpha}|}. \tag{27a}$$

The second factor in Eq. (27) may be called the impedance loss, because it can be evaluted from direct measurements of the impedance of one pair of terminals of the mixer for each of two different load conditions at the other pair. This loss and the actual minimum loss encountered in practice are the same only if the first term in the expression is unity. This is true if the mixer obeys the reciprocity condition.

If the mixer is worked backward, that is, caused to generate the signal frequency from an applied i-f voltage, the loss for this process may be calculated in a similar manner. The loss L' from low- to high-frequency power is found to be identical with Eq. (27) except that the reciprocal of first term appears; that is,

$$L' = \frac{|Y_{\beta\alpha}|}{|Y_{\alpha\beta}|}\left(\frac{1 + \sqrt{1 - \epsilon}}{1 - \sqrt{1 - \epsilon}}\right). \tag{28}$$

If the ratio of Eqs. (27) and (28) is taken,

$$\frac{L}{L'} = \frac{|Y_{\alpha\beta}|^2}{|Y_{\beta\alpha}|^2}. \tag{29}$$

This ratio of the losses in the two directions reveals to what approximation reciprocity holds. Since, as mentioned earlier, the loss is usually greater in the direction from r-f to i-f power than in the other direction, when the reciprocity theorem is not obeyed the relation between $Y_{\alpha\beta}$ and $Y_{\beta\alpha}$ can be stated to be, almost without exception,

$$|Y_{\alpha\beta}| \geqq |Y_{\beta\alpha}|. \tag{30}$$

2·7. The Relation between the Input Admittance and the Load Admittance.—The representation of the mixer as a linear network makes it apparent that the input admittance cannot be independent of the load admittance, and, in fact, the relationship between them may be calculated with the aid of Eq. (27). This is most easily done for certain simple cases from which the general interdependence may be discovered. For example, suppose that the i-f output terminals are connected to a pure susceptance which can be adjusted through all values between negative and positive infinity. Suppose, further, that the mixer includes r-f matching devices such that, under the condition of infinite load suscept-

ance, the signal admittance is real. From Eq. (14) it is evident that this may be written

$$Y_{sc} = G_{sc} = G_{\alpha\alpha}. \tag{31}$$

The load susceptance may then be adjusted to make the input admittance mismatched to Y_{sc} by as large an amount as possible. This may be expressed, by use of Eq. (14), as

$$Y_{oc} = G_{\alpha\alpha} - \frac{Y_{\alpha\beta}\, Y_{\beta\alpha}}{G_{\beta\beta} + j(B_{\beta\beta} + b_\beta)}. \tag{32}$$

The mismatch between Y_{oc} and Y_{sc} may be expressed in terms of the absolute value of the reflection coefficient Γ of Y_{oc} relative to Y_{sc}, which is

$$|\Gamma| = \left|\frac{Y_{oc} - Y_{sc}}{Y_{oc} + Y_{sc}}\right| = \left|\frac{-Y_{\alpha\beta}Y_{\beta\alpha}}{2G_{\alpha\alpha}G_{\beta\beta} + G_{\alpha\beta\beta\alpha} + j2G_{\alpha\alpha}(B_{\beta\beta} + b_\beta)}\right|, \tag{33}$$

or

$$|\Gamma|^2 = \frac{(G_{\alpha\beta\beta\alpha})^2 + (B_{\alpha\beta\beta\alpha})^2}{(2G_{\alpha\alpha}G_{\beta\beta} - G_{\alpha\beta\beta\alpha})^2 + [2G_{\alpha\alpha}(B_{\beta\beta} + b_\beta) - B_{\alpha\beta\beta\alpha}]^2}. \tag{34}$$

The maximum loss due to mismatch, corresponding to the maximum of $|\Gamma|^2$, can be found by setting the partial derivative of $|\Gamma|^2$ with respect to $(B_{\beta\beta} + b_\beta)$ equal to zero. The result of this is

$$B_{\beta\beta} + b_\beta = +\frac{B_{\alpha\beta\beta\alpha}}{2G_{\alpha\alpha}}. \tag{35}$$

This expression is identical with Eq. (22), which gives the optimum load susceptance from the standpoint of conversion loss. If this susceptance value is used in Eq. (32), the result is

$$Y_{oc} = G_{\alpha\alpha} - \frac{G_{\alpha\beta\beta\alpha} + jB_{\alpha\beta\beta\alpha}}{G_{\beta\beta} + j\,\dfrac{B_{\alpha\beta\beta\alpha}}{2G_{\alpha\alpha}}}. \tag{36}$$

The r-f signal is applied to a microwave converter through a coaxial line or a waveguide. The position in this input line at which the signal terminals of the equivalent network are located is, as yet, arbitrary. It is convenient to choose these terminals to be at a point at which Y_{oc} is real. This is not incompatible with making Y_{sc} real, because, for instance, the r-f matching in the mixer could be such that $G_{\alpha\alpha}$ is the characteristic admittance of the transmission line. Then Y_{sc} would be real at all points along the input line. Choosing the position of the input terminals to make Y_{oc} real makes the imaginary part of the second term of Eq. (36) equal to zero, or

$$G_{\beta\beta}B_{\alpha\beta\beta\alpha} - \frac{B_{\alpha\beta\beta\alpha}G_{\alpha\beta\beta\alpha}}{2G_{\alpha\alpha}} = 0. \tag{37}$$

This is satisfied if

$$2G_{\alpha\alpha}\,G_{\beta\beta} = G_{\alpha\beta\beta\alpha}, \qquad \text{or} \qquad B_{\alpha\beta\beta\alpha} = 0. \tag{38}$$

The first of the conditions of Eq. (38) results in ϵ greater than one and, therefore, it does not have real significance. The second of these conditions, however, results in

$$Y_{oc} = G_{\alpha\alpha} - \frac{G_{\alpha\beta\beta\alpha}}{G_{\beta\beta}} = G_{oc}. \tag{39}$$

From Eqs. (31) and (39),

$$\frac{G_{oc}}{G_{sc}} = 1 - \frac{G_{\alpha\beta\beta\alpha}}{G_{\alpha\alpha}G_{\beta\beta}}. \tag{40}$$

Under these conditions, however, Eq. (28) for ϵ may be used to show that

$$\frac{G_{oc}}{G_{sc}} = 1 - \epsilon. \tag{41}$$

Therefore Eq. (27) becomes

$$L = \frac{|Y_{\alpha\beta}|}{|Y_{\beta\alpha}|}\,\frac{1 + \sqrt{\dfrac{G_{oc}}{G_{sc}}}}{1 - \sqrt{\dfrac{G_{oc}}{G_{sc}}}}. \tag{42}$$

It is now clear that the measurement of these two admittances at one pair of terminals of the converter, under each of two conditions at the other pair, constitutes, according to Eq. (42), a measurement of the mimimum conversion loss of the converter, except for the reciprocity factor. The result of this measurement, sometimes called the impedance loss L_Z, is given by

$$L_Z = \frac{1 + \sqrt{G_{oc}/G_{sc}}}{1 - \sqrt{G_{oc}/G_{sc}}}. \tag{43}$$

This expression is identical with one which can be derived for the transmission loss of a piece of transmission line an integral number of half wavelengths long. For the transmission line, G_{oc} is the conductance of the input terminals with the output terminals open-circuited and G_{sc} is the conductance with the output terminals short-circuited. An experimental apparatus to be described in Chap. 8 has been designed and used to measure the impedance loss of crystal mixers, by measurement of $\sqrt{G_{oc}/G_{sc}}$. The results, for silicon crystals, have been in good agreement with those obtained by more direct methods.

2·8. The Dependence of Input Admittance on the I-f Load Admittance. The characteristic admittance of a transmission line may be shown to be just $\sqrt{G_{sc}G_{oc}}$. That the same expression holds for the converter may be verified by putting Eq. (24), for g_β, into Eq. (14), under the condition

that the choice of the position of the input terminals is the same as before, and therefore $B_{\alpha\beta\beta\alpha}$ is zero, as in Eq. (38). It is now possible to discover the range of input admittances which will be shown by the converter for all possible values of i-f load admittance, by use of Eq. (43). It is a general theorem for linear networks that a circle on an admittance diagram is transformed by the network into another circle. It is known that, under the special conditions here assumed, two points

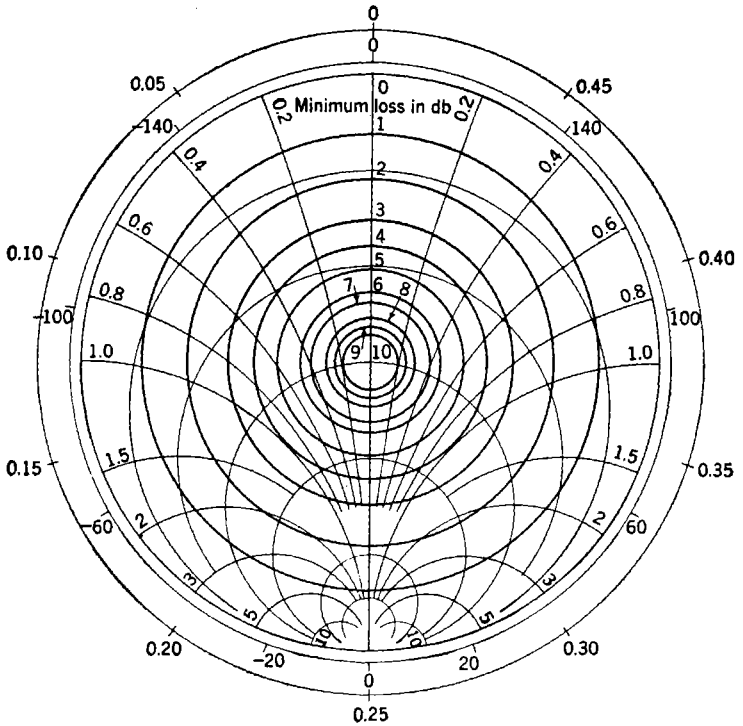

FIG. 2·19.—Limiting r-f admittance contours vs. i-f load admittance for several values of impedance loss in decibels.

of the admittance contour at the input terminals, resulting for output load admittances along the circle $y_\beta = jb_\beta$ (a circle of infinite radius in a cartesian plot of conductance vs. susceptance, or the outside circle on a Smith chart), fall upon the conductance axis. It has also been shown that G_{oc} differs from G_{sc} by the maximum amount for this range of load admittances and, therefore, it follows that the conductance axis is a diameter of the input-admittance circle. If, further, the r-f tuning is so chosen that $\sqrt{G_{sc}G_{oc}}$ corresponds to a matched input line, the circle will be centered, on a Smith chart, at Y_0. Several such circles are shown in

Fig. 2·19, corresponding to various values of L_Z between 0 and 10 db. Under these conditions, only points inside the circle corresponding to the L_Z of the converter in question can be produced as the input admittance to the converter by choice of the load admittance. The center point of the circle Y_0 is obtained when the load admittance has the optimum value, as given by Eq. (25).

One of the important tasks in the design of converter and mixer circuits is the adjustment of the tuning of the input circuit in such a way that minimum loss is obtained for the largest possible number of crystal units. In this connection it is important to realize the significance of the definition of the gain, and its reciprocal the loss, as it appears in the expression for the over-all noise figure for the cascaded converter and i-f amplifier. The input circuit of the i-f amplifier does not need to provide for the converter a load admittance such that the converter delivers maximum power. The conversion loss of a given converter, therefore, is not necessarily minimized by a tuning that matches the signal generator to the converter, with the converter connected to the i-f amplifier. The i-f input circuit is so chosen that the smallest possible noise figure compatible with the desired bandwidth and the amplifier tubes is achieved. As a result, the input admittance of the mixer lies nearer to the boundary of the region inside the appropriate circle of Fig. 2·19 than to the center. Nevertheless, for minimum over-all noise figure, the mixer tuning should be such that the characteristic admittance of the mixer is matched to the admittance of the r-f signal generator, since this gives minimum conversion loss. Therefore, a load admittance having the value such that the mixer delivers maximum power should be used in experiments intended to establish optimum r-f tuning conditions for the mixer.

For converters in which $|Y_{\alpha\beta}| \neq |Y_{\beta\alpha}|$, and the actual loss therefore does not equal the impedance loss, the dependence of the input admittance upon the load admittance is greater than would be expected if reciprocity were assumed because of the relation of Eq. (30). With such units it is even more important that the input matching is achieved under the proper load conditions than for units of equivalent actual loss but for which reciprocity holds.

Because the values of the parametric admittances, Y_{nm} of Eqs. (7) are dependent, through Eqs. (8), (9), (10), and (11), upon the image-frequency termination y_γ, the characteristic signal input admittance as well as the loss are to some extent determined by this image-frequency termination. In a converter unit that is, in itself, insensitive to frequency but that is to be used with a high-Q resonator such as a TR switch, the measurement of the characteristic input admittance should be made with this resonator in place. The input admittance is less dependent on the image-frequency load admittance, however, than on the i-f load admit-

tance. The mismatch encountered if the tuning is made optimum without the resonator in place is not large because an increase in loss of only a few tenths of a decibel would result even if the mixer were matched to the signal generator with an incorrect admittance connected to the i-f output terminals. A calculation of the magnitude of the interdependence of the signal admittance and the image-frequency load admittance requires a knowledge of the values of the parametric admittances y_{nm} of Eqs. (5). Although these can be measured, this subject will not be discussed here.

2·9. Dependence of the I-f Admittance upon R-f Matching Conditions.—In a fashion exactly analogous to that of Sec. 2·8, the admittance of the i-f terminals of a converter may be shown to be dependent upon the signal-generator admittance. The symmetry of Eqs. (7) suggests that an expression similar to Eq. (43) could be written down immediately, where G_{oc} and G_{sc} refer respectively to the conductance of suitably chosen i-f terminals for the conditions of open-circuited signal terminals and short-circuited signal terminals. It is more convenient, however, to keep the previous choice of the position of the r-f signal terminals and the r-f matching conditions previously defined, to allow a single set of terminals to be used for the description of the converter in either direction. In practice, a special r-f circuit is required to allow variation of the admittance connected to the signal terminals independently of that connected to the image terminals. It will be assumed that this can be done, however, and with this assumption a useful relation can be derived.

The three conditions set up in the previous section were:

1. R-f matching such that $Y_{\alpha\alpha}$ is real, and equal to $G_{\alpha\alpha}$.
2. Choice of the position of the r-f signal terminals such that $(Y_{\alpha\beta}Y_{\beta\alpha})$ is real, and equal to $G_{\alpha\beta\beta\alpha}$.
3. Addition of a susceptance, b_β, to the i-f terminals, which resonates out the imaginary part of $Y_{\beta\beta}$. This is the condition of Eq. (35), which was used to calculate the quantity denoted by Y_{oc}.

By the use of these three conditions, the expression for the impedance loss may be calculated for measurements of the i-f admittance for short-circuited and open-circuited signal terminals. From Condition 3 and Eq. (15) the i-f admittance for short-circuited signal terminals may be written

$$Y_{sc\alpha} = G_{\beta\beta} = G_{sc\alpha}. \tag{44}$$

From Conditions 1 and 2, the i-f admittance for open-circuited r-f terminals may be written

$$Y_{oc\alpha} = G_{\beta\beta} - \frac{G_{\alpha\beta\beta\alpha}}{G_{\alpha\alpha}} = G_{oc\alpha}. \tag{45}$$

The ratio $G_{oc\alpha}/G_{sc\alpha}$ is therefore identical with that given by Eq. (40), and

the impedance loss can be written in terms of this ratio in the same way as for the r-f terminals

$$L_Z = \frac{1 + \sqrt{G_{oc\alpha}/G_{sc\alpha}}}{1 - \sqrt{G_{oc\alpha}/G_{sc\alpha}}}. \tag{46}$$

This relation reveals a point that is important in the design of converters and i-f amplifiers. The i-f output admittance of the converter, which plays an important role in determining the i-f amplifier noise figure and bandwidth, can fall anywhere inside the appropriate circle on Fig. 2·19 depending upon the admittance of the signal generator connected to the input terminals of the converter. If a resonant circuit is included in the converter or in the line between the converter and the antenna, the i-f admittance may be expected to vary with the intermediate frequency. If the signal generator is matched to the crystal converter, the i-f admittance will be the characteristic admittance of the i-f terminals, which corresponds to the center point of Fig. 2·19 for that particular crystal, image-frequency termination, and harmonic-frequency termination. If the image-frequency termination is identical with that at the signal frequency, the i-f admittance of most crystals now available is between 2000 and 3000 micromhos. This value for the i-f conductance of the converter is valid only when the signal and image terminals are both connected to admittances matching the input admittance of the converter.

Since the converter is tuned for minimum conversion loss, the admittance of the signal generator is nearly matched to the characteristic admittance of the signal terminals of the converter. At the image frequency, however, the signal generator admittance may have a different value, and this, too, affects the i-f admittance of the converter. In circuits involving an r-f resonator, the image-frequency load admittance is usually very different from that at the signal frequency. A TR cavity having a loaded Q of 300 at a signal frequency of 3000 Mc/sec almost completely reflects the image-frequency wave if the intermediate frequency is 30 Mc/sec. Because of the symmetry, shown by Eq. (5), between the signal and image frequencies, an expression may be written which expresses the impedance loss of the converter in terms of the i-f conductances measured with the image-frequency terminals open-circuited and short-circuited. This expression is

$$L_Z = \frac{1 + \sqrt{G_{oc\gamma}/G_{sc\gamma}}}{1 - \sqrt{G_{oc\gamma}/G_{sc\gamma}}}. \tag{47}$$

The impedance loss L_Z is the minimum loss that could be obtained if the roles of the signal and image terminals were interchanged. It is, therefore, the same as the conversion loss between the signal and i-f terminals

when the image-frequency terminals are connected to an admittance equal to the admittance of the signal generator. Again, Fig. 2·19 is applicable. The center point now corresponds to the admittance resulting if the image terminals are connected to an admittance equal to the optimum signal-generator admittance. Since the termination at the signal frequency will be near this value, a low-Q circuit would provide the same admittance at both signal and image frequencies. The i-f admittance would then correspond to the center of the chart and would be between 2000 and 3000 micromhos, as mentioned above.

If the termination at the signal frequency is kept constant and the phase of a complete reflection of the image-frequency wave is varied, the resulting i-f admittance should move along a circle, such as the appropriate one in Fig. 2·19. This could be done by varying the length of a transmission line, matched both ways at the signal frequency, connected between the converter and the TR cavity. An incomplete reflection of the image frequency would give rise to admittances on a smaller circle. It is thus apparent that any mixer or converter circuit, or any circuit preceding the converter, which reflects at the image frequency may be expected to give rise to an i-f admittance that varies with the operating frequency. For this reason it is advantageous to make the line length between the crystal and TR cavity, or other device reflecting the image frequency, as short as possible. The variations encountered in the i-f conductance are of sufficient magnitude to affect seriously the bandpass characteristic of the input circuit, and the variations in capacitance can have a serious detuning effect on the i-f input circuit. In order to evaluate these variations it is convenient to put Eq. (47) into a different form. If Eq. (47) is multiplied through by $\sqrt{G_{sc\gamma}}$ and then by $(\sqrt{G_{sc\gamma}}+\sqrt{G_{oc\gamma}})$, the result is

$$L_Z = \frac{G_{sc\gamma} + G_{oc\gamma} + 2\sqrt{G_{sc\gamma}G_{oc\gamma}}}{G_{sc\gamma} - G_{oc\gamma}}.$$

Since $\sqrt{G_{sc\gamma}G_{oc\gamma}} = G_0$ (the center point of Fig. 2·19, or that value of the i-f admittance with an image-frequency admittance equal to that at the signal frequency), it may be shown that, for losses greater than 5 db, the equation

$$\frac{G_{sc\gamma} - G_{oc\gamma}}{G_0} = \frac{4}{L_Z}$$

holds, within about 10 per cent. Since 5 db is about the minimum loss found for available crystal units, the maximum variation of i-f conductance is from about one half to twice the mean value for open-circuited and short-circuited image-frequency terminations, respectively. In a given r-f circuit, the variation with different crystal cartridges, at a

fixed frequency, is determined by the variation in G_0 from unit to unit and by the fact that the effective phase length, and so the position of the apparent terminals satisfying Condition 2, is not the same from cartridge to cartridge. A consideration of Fig. 2·19 shows that small variations in the phase of the reflection of the image frequency give rise, primarily, to changes in i-f susceptance, for lengths giving either minimum or maximum conductance. In the region between these values, small variations give rise, primarily, to changes in conductance. The choice of the length of line used could, in part, be determined by which of these two kinds of variation has the less objectionable effect upon the receiver noise figure and bandpass characteristic.

Because the complex conjugates of the image voltage and admittances appear in Eqs. (5), it can be shown that the i-f admittance resulting from given signal-frequency and image-frequency terminations is the complex conjugate of that resulting if the signal-frequency and image-frequency admittances are interchanged. For instance, if the signal terminals are connected to a signal generator of the admittance that gives minimum loss, and if the image terminals are connected to a variable length of line, short-circuited at its far end, the i-f admittance goes around a circle such as the appropriate one of Fig. 2·19, as the line length is varied. If the roles of the signal and image terminals are interchanged the same circle will result but it will be traversed in the opposite direction as the line length is varied.

From this it can be shown that, if the signal and image terminations are kept equal to each other but are changed together, the i-f admittance will remain real provided Condition 3 is satisfied. The connection between the impedance loss and the limiting values of the i-f conductance, for complete reflection of both signal and image voltages, for all phases, is

$$L_z = 2\,\frac{1 + \sqrt{G_{\min}/G_{\max}}}{1 - \sqrt{G_{\min}/G_{\max}}}. \tag{48}$$

Experiments to measure conversion loss by means of this relation have been performed by R. H. Dicke. For silicon crystals, where reciprocity is found to hold, good agreement with the conversion losses measured by other methods was found. Instead of a complete reflection of the signal- and image-frequency waves, Dicke's method made use of a post protruding into the input waveguide of the mixer, giving a known reflection coefficient less than unity, to allow transmission of the local-oscillator wave through the same waveguide. It is necessary in such an experiment to use such a low intermediate frequency that a reflection some distance back from the crystal in the input waveguide gives rise to identical load admittances at the mixer, at the signal and image fre-

quencies. If the i-f wavelength is not very much longer than the distance in the waveguide between the crystal and the point at which the reflection occurs, the phase lengths of the waveguide at the image and signal frequencies are different and the imaginary parts of the i-f currents excited by the reflected signal and image waves are not exactly equal in magnitude and opposite in phase. There will be, consequently, a variation of the imaginary part of the i-f admittance as the line length is varied. In Dicke's apparatus the i-f frequency used was 60 cps and, therefore, this condition was well satisfied. However, with intermediate frequencies of 30 Mc/sec and line lengths of several feet, variation of the susceptance component is observed.

In summary, it should be emphasized that the i-f admittance of a crystal converter is not a function of the crystal unit alone but is dependent to a considerable degree upon the details of the design of the mixer circuit. The range of admittance values that are possible is determined by the crystal unit and by its minimum loss as a converter. However, a reasonably good crystal unit can be made to show conductances differing as much as a factor of 8, as can be seen from Eq. (48), the factor depending on the nature of the mixer circuit. In addition, the susceptance of the i-f terminals of the converter is not completely determined by the distributed and lumped capacitances and inductances of the physical structure, since the susceptance can be affected to a considerable extent by the design of the r-f circuits. These effects become rapidly more pronounced as the crystal units are improved and, therefore, increasing care must be taken to obtain optimum performance from improved units. The input circuit of the i-f amplifier must be designed to give satisfactory performance with all values of the i-f output admittance of the mixer to be expected with different crystal units in the whole band of operating frequencies. It may be found advisable to restrict some receivers to the use of crystals having more than the minimum loss, just to gain the added independence in the r-f and i-f circuits such crystals would give. The effect would be similar to that of adding an attenuator to increase the total loss by the same amount, in either the r-f or the i-f circuit.

2·10. Dependence of Conversion Loss on Image-frequency Termination.—The minimum loss for a particular image termination, as defined by Eq. (27), depends upon the value of the image-frequency load, through Eqs. (8), (9), (10), and (11). The magnitude of the variation in the minimum loss which can be produced by changes in the image-frequency load admittance depends upon the values of the parameters $y_{\alpha\alpha}$, $y_{\alpha\beta}$, $y_{\alpha\gamma}$, $y_{\beta\alpha}$, and $y_{\beta\beta}$ of Eq. (5), and cannot be simply related to the minimum loss with a particular image-frequency load admittance. That there should be an effect of this kind, however, can qualitatively be seen from simple arguments.

The most pronounced effect of the image-frequency admittance on the conversion efficiency might be expected to occur with crystals with the smallest loss. Suppose, for instance, one had a converter that had unity loss, with a dissipative load connected to the image terminals. The device is said to have unity loss if the signal voltage develops the same available i-f power as is available from the r-f signal generator. The existence of the i-f voltage across the i-f terminals, however, must give rise to an image-frequency voltage across the image terminals and, therefore, to some dissipation of power in the image-frequency load. The signal is thus responsible for the generation of more total power than is available from the signal generator and this is incompatible with the assumption that the converter can be represented by a linear passive network. A perfect converter, for which the passive network representation is valid, has a loss of 3 db if the signal-generator and image-load admittances are equal and are matched to the characteristic input admittance of the converter. One half the available signal power is transferred to the image frequency and dissipated in the image-frequency load. If there is no isolation of the signal- and image-frequency waves by means of tuned circuits, the minimum loss which a crystal converter representable by a linear passive network can have is 3 db.

If, on the other hand, the image terminals are provided with a load having no conductance component, there will be some value of the susceptance of the load which will allow the converter to have no loss between the signal and i-f terminals. It can be shown that this will occur, if the terminal positions are chosen in accordance with the conditions of Sec. 2·9, for the image terminals either open-circuited or short-circuited. The i-f admittance will be a pure conductance, if the signal generator is matched to the characteristic admittance of the signal terminals and if the conditions of Sec. 2·9 are fulfilled.

Such a perfect converter has not so far been made, but the crystals now available for use as converters do give losses as small as 5 db. The dependence of the loss on the image-frequency load would not be expected to be so pronounced as in an ideal lossless converter. A reduction of less than 3 db in the conversion loss from the value obtained with an image-frequency admittance equal to the signal-frequency admittance, therefore, could be obtained through the use of an image-frequency load reflecting in the optimum phase. The magnitude of the effect depends on other parameters of the crystal as well as on the loss measured under the matched condition of the image, and an analysis will not be given here. This subject is discussed in detail by H. C. Torrey in Vol. 15 of this series. This discussion shows several possibilities for the dependence of the loss on the image-frequency load admittance. A plot of the loss as a function of the image load admittance can be made in the form of a

surface, where the height of the surface above a particular point in the complex half plane corresponding to positive image load conductances gives the loss associated with that particular value of the image termination. For some crystal units, the loss is highest for open-circuited image terminals and falls to a minimum at large absolute values of the load admittance. For other possible crystals, the reverse might be true, and for still others a maximum loss, or a highest point of the surface, might occur for a load consisting of a pure conductance, with the minimum loss at open circuit.

The determination of the best image-frequency load admittance for a crystal of a particular type must be done experimentally. There are two ways in which this can be done. One way is to measure certain differential coefficients descriptive of the crystal mixer. R. H. Dicke and S. Roberts[1] have shown that the coefficients of the linear-network representation of the crystal converter can be expressed in terms of these differentials, which in turn can be found by measurement of the r-f admittance at the local-oscillator level and measurement of the d-c characteristics. Examples of differentials to which the description of the converter has been reduced are the rate of change of direct current with an applied d-c voltage, the rate of change of the direct current with the r-f power, the rate of change of r-f conductance with the applied d-c voltage, and the rate of change of r-f conductance with r-f power. It was possible to show that from these differentials, the coefficients of Eq. (5), descriptive of the converter in question, can be evaluated and therefore the conversion loss for any particular image-frequency load can be evaluated. Also from these measurements, the value of $|Y_{\alpha\beta}|/|Y_{\beta\alpha}|$ can be found and, therefore, the loss can be calculated for the conversion of an r-f signal to an i-f signal, or of an i-f signal to an r-f signal. This treatment has been extended by H. C. Torrey and is discussed in detail in Vol. 15 of this series.

The magnitude of the variations in the minimum loss of a converter with ordinary crystal units, resulting for different image-frequency loads, has been found by calculation from the differential coefficients to be about 1.5 db. The loss can usually be made either greater or less than the value obtained with an image-frequency load equal to the signal-generator admittance. The loss with equal signal and image loads is usually about midway between the two limits. Thus there might be a reduction of about $\frac{3}{4}$ db in conversion loss to be gained by choice of the best phase of an image-frequency reflection in the converter. Because the noise temperature of the converter may also be affected by the reflection of the

[1] R. H. Dicke and S. Roberts, "Theory of Radar Mixers," RL Report No. 287, July 16, 1942.

image frequency, the effect of the image-frequency reflection on the overall noise figure is not determined by the loss alone.

Another measurement that can be made to determine the effect of the image-frequency load on the loss is the direct measurement of the loss for various values of the image-load admittance. Direct measurements of the available i-f power, for a particular value of available signal power, are difficult to make because the i-f output admittance and the signal admittance of the mixer depend on the image-load admittance. For each experimental value of the image admittance, the r-f matching must be adjusted for minimum loss, since otherwise the effect of a mismatch may give rise to a change in the measured loss, which obscures the effect under investigation. If the available i-f power is found by measurement of the power delivered to an i-f load, the admittance of the i-f load must be such that the load absorbs all the i-f power available, or the power lost because of mismatch must be known for each value of the admittance of the image-frequency load.

Experiments of this sort have been carried out at the Radiation Laboratory and elsewhere, and the results were substantially in agreement with the predictions from the measurements of the differentials. In the experiments a variable length of line was used between the mixer unit and a resonant TR switch. The TR cavity provides almost a complete short circuit of the input line of the mixer at the image frequency, whereas it provides a matched generator at the signal frequency, when the signal generator is connected to the input side of the TR cavity. The r-f tuning of the mixer was such that when the TR cavity was not present and the image frequency was therefore not reflected to the mixer, the mixer represented a matched load on the waveguide. Under this condition, the signal admittance of the mixer with the TR cavity in place should fall on a circle of constant reflection coefficient for all lengths of the line between the TR cavity and the mixer. Variation of the length of this line, therefore, should not change the reflection loss on the r-f side of the mixer. The i-f load admittance was made equal to the complex conjugate of the i-f output admittance of the mixer when the TR cavity was removed and the input line was thus matched at both the signal and the image frequencies. With the TR cavity in place, the i-f output admittance measured relative to the i-f conductance with no TR cavity, should then fall, for all lengths of the line between the TR cavity and the mixer, on a circle about the center of a Smith chart. In this manner, the reflection loss on the i-f side is made to be independent of the r-f line length. With these precautions the results were still not considered to be very dependable, but no gross disagreement with the results of other methods was found.

According to the calculations based on the differential coefficients, the

minimum and maximum values of the loss should occur when the susceptance has the same value as when the TR cavity is not present. This prediction was not verified, however, and therefore, measurements were made of the i-f output admittance as a function of the line length. Instead of a circle on a Smith chart, a curve reproduced in Fig. 2·20 was found, where the experimental points are indicated by the crosses and the closed contour is a smooth curve drawn through them, consistent

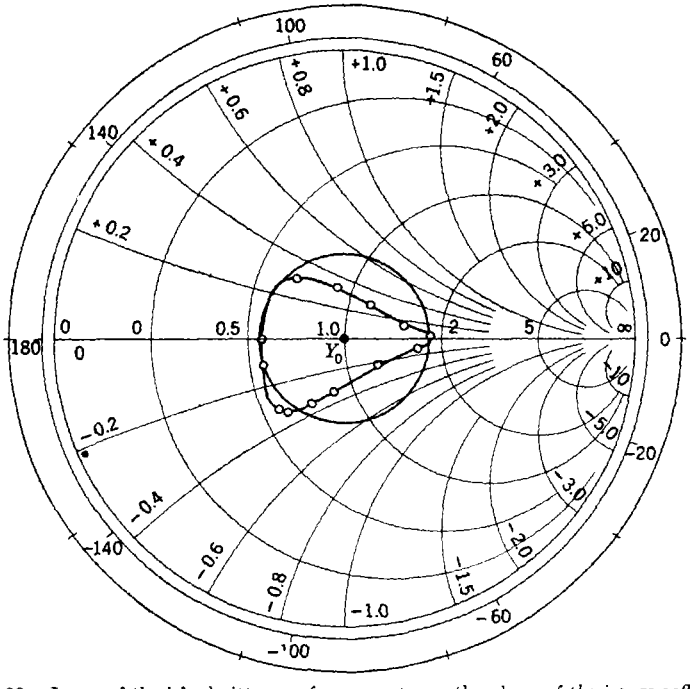

FIG. 2·20.—Locus of the i-f admittance of a converter as the phase of the image reflection is varied.

with the probable experimental error. It will be observed that there is a considerable departure from a circle in the values of the susceptance for conductances higher than the characteristic conductance. The values of the maximum and minimum conductances, however, if put into Eq. (47), give a loss for the mixer which agrees well with a previous direct measurement of the conversion loss of the same crystal. A circle representing the expected locus of the i-f admittance as a function of the r-f line length is also drawn in the figure for comparison. In addition, the value of the conductance was measured with the TR cavity removed, and it was found to be exactly the geometric mean of the minimum and maximum

values, or $\sqrt{G_{oc\gamma}/G_{sc\gamma}}$, as predicted from the linear-network representation. Thus the only disagreement is in the susceptance values of the i-f admittance, and no explanation for this has been found. A possibility is that a variation in a harmonic-frequency load is responsible, but, since the line length was changed by the use of a long split waveguide of variable width, it is improbable that the variation of the effective length of the line at harmonic frequencies would bear a simple relation to that at the fundamental frequency. Since the figure appears to be closed, such a relation would be necessary if a harmonic frequency were responsible for the distortion of the circle.

2·11. Measurement, with an Admittance Bridge, of the Dependence of Conversion Loss on the Image Reflection.—Another measurement of the dependence of the conversion loss on the image-frequency load admittance was carried out for several crystal units by means of measure-

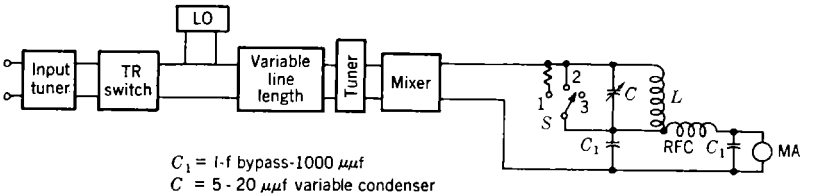

FIG. 2·21.—Apparatus for measurement of effect of reflection of the image-frequency wave on conversion loss.

ment of the impedance loss of a mixer with several different lengths of line between the crystal and the TR cavity. The apparatus with which this was done was an admittance bridge, which will be described in Chap. 8. The TR cavity and the variable length of line between it and the crystal were considered to be included in the circuit represented by a linear network. The resulting impedance loss therefore included the loss in the TR cavity. Figure 2·21 shows a block diagram of the converter and variable i-f load circuit that were used. Since the shunt admittance of the i-f resonant circuit appears as a part of the converter circuit and contributes to the loss, pains were taken to make it sufficiently small to contribute only a negligible amount to the loss. With the coil used, the shunt admittance was less than twenty micromhos and this is very much smaller than the several thousand micromhos usually encountered as the output admittance of a crystal converter.

The procedure of the experiment was as follows. For a particular setting of the variable line length, the switch S was first set in position (1), giving an i-f load admittance equal to the complex conjugate of the i-f output admittance of a mixer with an average crystal and no TR cavity. Then the mixer tuner was so adjusted that a small signal at the signal frequency was not reflected from the TR cavity. At the same time

the coupling and frequency of the local oscillator were set to the correct values. This tuning serves to establish nearly the proper loading on the TR cavity. If a large standing-wave ratio existed in the line between the mixer and the TR cavity, the part of the total conversion loss contributed by the TR cavity would be large, and a variation in it might obscure the effect under investigation.

Next, the switch S was put at position (2) and the tuner on the input side of the TR cavity was adjusted to make the small signal pass into the tuner and converter without reflection. This made G_{sc} equal to the characteristic admittance of the waveguide. Next, the switch was put into position (3) and the variable condenser adjusted for maximum reflection of the small signal at the input terminals of the first tuner. Under these conditions, the ratio $G_{sc\beta}/G_{oc\beta}$ is equal to the voltage standing-wave ratio, and Eq. (43) may be written as

$$L_Z = \frac{\sqrt{r} + 1}{\sqrt{r} - 1}. \tag{49}$$

From this expression, the impedance loss was calculated for that particular setting of the variable line length. The line length was adjusted in units of about 15° of phase and the whole procedure was repeated for each setting. Curves showing the impedance loss of the converter, including the loss of the TR cavity, as a function of the setting of the variable line length, for three representative crystals, are shown in Fig. 2·22. Because the loss measured by this apparatus, with the TR cavity removed, agreed well with the calibration of the crystals by other methods, it was assumed that reciprocity held and the impedance loss was the same as the loss for conversion of the signal from radio to intermediate frequency.

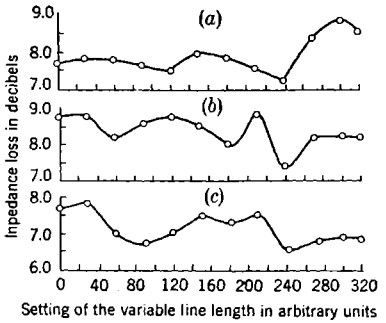

FIG. 2·22.—Three representative curves for the impedance loss of a converter including a TR cavity, as a function of the length of the line between the TR cavity and the crystal.

It will be observed that the curves do not show a cyclic variation of the loss as a function of line length, as would be expected. One reason for this might be that, for each line length, the mixer tuner was adjusted to establish the proper load admittance for the TR switch and this adjustment has some effect on the phase length of the line between the TR switch and the crystal. It is therefore possible that the actual phase length of the line was not a simple function of the setting of the line-length

adjustment. Another possibility is that the harmonics and other high-order waves developed by the crystal, which would be reflected to a large extent by the TR cavity, are responsible for the irregularity. These higher-frequency components would be affected in various ways by the setting of the line-length adjustment. The line length was varied by means of a polystyrene wedge that could be slid from the side to the center of the waveguide. This explanation of the irregularity would be in agreement with some measurements made at the Bell Telephone Laboratories on the effect of the image-frequency load on the conversion loss by the direct measurement of output power. It was reported that, in these experiments too, very irregular results were obtained until harmonic chokes were installed in the mixer unit. These chokes prevented the transmission of the frequency components in the region of the second harmonic back into the adjustable line and so to the TR cavity, and the curves obtained for the loss as a function of line length with the chokes in place were simple and periodic. The peak-to-peak variations were about the same as in the curves of Fig. 2·22, although, since they did not apply to the same crystals, no exact comparison could be made.

An attempt was made to discover which line length corresponded to minimum loss. For each point of the curves of Fig. 2·22, the setting of the i-f condenser which maximized the standing-wave ratio was observed and from this the imaginary part of the i-f admittance could be estimated. The maxima and minima all seemed to correspond to real i-f admittances, in accordance with predictions from the linear-network representation, and independent measurements of the admittances for some of these points showed that, in most cases, the minimum loss occurred for the minimum-conductance point of the i-f admittance contour. This, however, was not always true; that is, with some crystals the maximum conductance point gave minimum loss. It thus appears that considerably more data must be obtained before it will be possible to include, in the design of converters, the image-frequency termination giving the minimum possible conversion loss. None of the designs to be described in later chapters includes this feature. Before it could definitely be stated that the converter should be designed for minimum loss in this way, the effect of the image-frequency load admittance on the noise temperature of the converter would have to be measured. Also, the fact that a low i-f conductance is usually associated with the best conversion efficiency makes the design of input circuits having a wide pass band difficult because the i-f capacitance of the output terminals of the mixer unit cannot be correspondingly reduced. If, on the other hand, there is a further decrease in the conversion loss of available crystals, it will become more important to include the proper image-frequency load in the

converter. At present, it appears that with ordinary crystals only a fraction of a decibel is to be gained by the reflection of the image wave in the best phase. An experiment on the effect of image reflection on both the noise temperature and the conversion loss has been performed by E. R. Beringer, M. C. Waltz, and C. P. Gadsden. The apparatus used for this experiment is described in Chap. 8. The results show that the over-all noise figure can be definitely improved by the proper choice of the phase of the image reflection, because the noise temperature did not change to compensate for the decrease in conversion loss. Experiments similar to this should be done for large numbers of crystals to determine if a fixed image-frequency reflection could be used for all crystals and over a broad band of frequencies.

2·12. The Effect of Reflection of the Second Harmonic.—As has already been stated, the crystal mixer contains frequency components at the second harmonic and at higher frequencies. The treatment of these harmonics is likely to have some effect on the i-f admittance, the loss, and the signal admittance. Some manifestations of these frequencies have already been mentioned in Sec. 2·11 but a few remarks about some experiments that dealt independently with the higher-frequency components are in order. These experiments have been primarily concerned with the effect on the conversion loss of the load admittance at the frequency of the second harmonic.

The first observation of an effect of waves having frequencies at the second harmonic of the local-oscillator or signal frequency was made at the Bell Telephone Laboratories in conjunction with experiments on a coaxial-line mixer designed by W. M. Sharpless[1] for 3000 Mc/sec. One of the design parameters was the position of an abrupt change in the diameter of the center conductor of the coaxial line connecting to the crystal. The signal generator could be matched into the mixer, for any position of the step change in diameter, by two other adjustments. Data were taken of the conversion loss as a function of the position of the step, with the signal-generator admittance adjusted for minimum loss at each position. When these data were plotted it was found that the conversion loss varied cyclically, with a repetition occurring for a motion of about 2.5 cm. Any variation caused by changes of admittances at the fundamental frequency would have repeated at each half wavelength, or 5 cm, of motion. Therefore, the observed variation was attributed to second-harmonic components. The magnitude of the variation was between 0.5 and 0.75 db from minimum to maximum. The final mixer design was chosen with the step in the position of minimum loss, and this

[1] W. M. Sharpless, "The Influence of Harmonics on 10-centimeter Performance of Silicon Crystal Converters," BTL Report MM-42-160-80, July 24, 1942.

mixer has since been used as the standard test mixer for acceptance tests of 1N21, 1N21A, and 1N21B crystals.

In the process of establishing the crystal-test specifications, measurements were made of large numbers of crystals in mixers of many different designs. None of the other mixers had dimensions specifically chosen for optimum second-harmonic effect and yet no large disagreements were observed between the average values obtained with the various types as long as the signal-frequency matching was made to correspond to the same tuning condition. It might be that an effect due to the second harmonic is very frequency-sensitive, and also requires individual adjustment for each crystal unit because of variations in the effective phase length of the cartridges. It appears that equally good conversion losses are obtained on the average with 3000-Mc/sec mixers that have no provision for reflection of the harmonics in the best phase. If it were considered worth while to include adjustments in a mixer which would allow the best possible performance to be obtained from each individual crystal, it would perhaps be reasonable to include, in addition to adjustments for the signal matching, the local-oscillator injection, and the image-frequency termination, an adjustment to give the best load admittance at the frequency of the second harmonic. It is doubtful that the termination for the second harmonic could remain optimum over the wide band of frequencies in which most mixers are now designed to be used. A mixer that contained all these adjustments would probably be very difficult to tune, unless each of the adjustments could be made independently of the others.

There have also been experiments in the 3-cm region (9000 to 10,000 Mc/sec) for the purpose of finding the effect of second harmonics on the conversion loss. For one of these experiments, also made at the Bell Telephone Laboratories, a mechanism indicated in Fig. 2·23 was used. A common crystal mount in this frequency range has a crystal mounted across the waveguide, along the narrow dimension. The waveguide extends a short distance beyond the crystal and is then short-circuited by a plate or a sliding plunger. The distance to this short circuit determines, in part, the tuning of the mixer at the signal frequency. Instead of an ordinary plunger, the mixer of this experiment had a thin plate extending across the waveguide along the narrow dimension in the center of the wide dimension and continuing in this position a considerable distance back along the waveguide. Except for a small phase shift, this plate acts in the same way, at the fundamental frequency, as a short-circuiting plate or plunger filling the whole cross section of the guide, since the half-width waveguides on either side of the diaphragm are waveguides beyond cutoff for the fundamental-frequency waves. At the frequency of the second harmonic, however, these half-width guides are wide

enough to allow propagation. Short-circuiting strips in the small guides can be adjusted to control the admittance of the waveguide at the harmonic frequency. Observation of the output power from the converter, with fixed input power, revealed a cyclic variation which repeated with the proper distance of motion of the two side strips to correspond to a second-harmonic effect. The variation observed totaled about 0.5 db from minimum to maximum. When the two side strips were replaced by resistive cards, tapered to give small reflections, the observed output

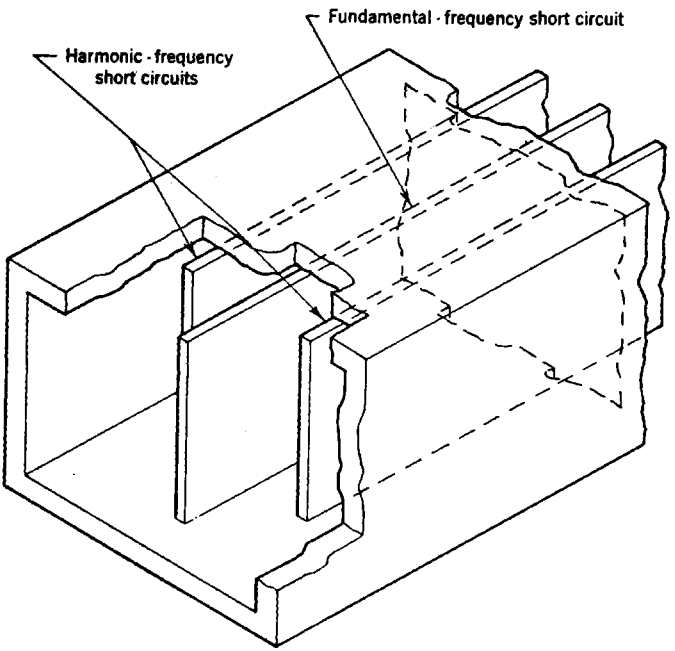

FIG. 2·23.—Back plunger, independently adjustable for fundamental and harmonic frequencies.

power was about midway between the maximum and minimum values found for the metal strips.

A similar experiment was undertaken in which the apparatus used for the measurement of conversion loss by the admittance method was used. This apparatus also operated at about 3.2 cm and contained waveguide of 0.400 by 0.900 in. inside dimensions. A short-circuiting plate was used over the end of the waveguide behind the crystal mount. To detect an effect due to the harmonic admittance of this part of the mixer circuit, this plate was replaced with one in the center of which was inserted a waveguide of 0.170 by 0.420 in. inside dimensions, as shown in Fig. 2·24.

Because this waveguide was beyond cutoff for the fundamental frequency, the motion of a short-circuiting plunger in the small waveguide would not affect the fundamental waves but would be expected to affect the admittance to the second harmonic and higher frequencies. In the second experiment, the tuner for the harmonic couples to a harmonic wave in the dominant mode only, whereas the tuner in the first experiment couples to both the dominant and the second modes.

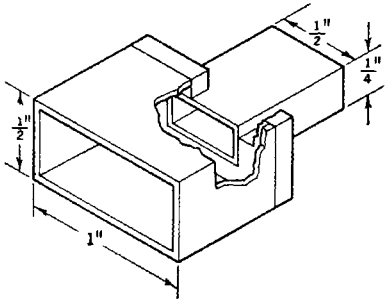

FIG. 2·24.—Harmonic-frequency "back-plunger" tuner.

A change in the conversion loss of the mixer, caused by a change in the position of the small plunger, would produce a change in the admittance measured with the i-f leads either short-circuited or open-circuited, or for both conditions. When this experiment was tried, with several representative 1N23A and 1N23B crystals, however, it was found that the effect on the admittances of moving the plunger was much smaller than could be measured, for both conditions, although the apparatus had sufficient sensitivity to detect a change in conversion loss as small as 0.05 db. The effect of harmonic frequencies would be expected to be larger for crystals designed to operate at the frequency of the second harmonic. An adapter was made to try 1N26 crystals normally used in the 1.25-cm band and for these crystals also, a negative result was found.

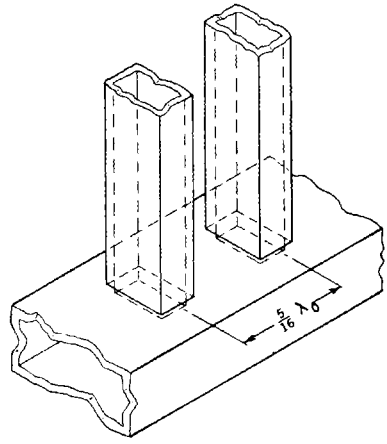

FIG. 2·25.—Harmonic-frequency admittance tuner.

In an effort to make the tuning of the load admittance at the harmonic frequency cover a wider range, a tuner illustrated in Fig. 2·25 was tried. This tuner consists of two small waveguides connected at right angles to the full-sized waveguide, about five-eighths of a harmonic wavelength apart. Sliding plungers in the small waveguides affect only the admittance at the harmonic frequencies because the waveguides are too narrow to support waves at the fundamental frequency. The section of waveguide containing these side arms was placed in the line

between the signal generator and the mixer. In this experiment no measurable effect of the position of the plungers on the value of the admittance of the converter at the signal frequency was found. In both these experiments, a slight change in the admittance of the mixer, which repeated at settings of the plungers corresponding to half-wavelengths at the second-harmonic frequency, was detected. The change was not large enough, however, to allow measurement of a change in the impedance loss.

Unfortunately, a direct measurement of output power was not tried with these same harmonic tuning devices. It may be suggested, however, that the reflection of the second harmonic appears in the reciprocity term $|Y_{\alpha\beta}|/|Y_{\beta\alpha}|$, in the expression for the conversion loss and therefore affects the actual conversion loss but not the impedance loss. This possibility may have further foundation in the fact that Dicke's proof of the reciprocity theorem requires certain relations to hold between the phases of the harmonic and fundamental frequency components in order that a time zero can be chosen about which the potential across the barrier may be expressed as an even function of time.

Like the image-frequency effects, the harmonic effects cannot be evaluated in terms of the possible improvements in the over-all noise figures of receivers without parallel experiments on the effect on the noise temperature of the converter. No such experiments are known to the author. It appears, at the present time, that the image-frequency termination has a greater influence on the over-all performance than the harmonic-frequency termination. The effects of the load admittance at harmonic frequencies are small compared with the variations among crystals. Making a converter circuit that has a wide pass band and includes optimum terminations for the image and harmonic frequencies throughout this band is not a simple task. Whether a fixed setting of these terminations would give, even at a single frequency, optimum or nearly optimum performance with the majority of crystal units, cannot be decided until further data have been accumulated. These are some of the questions that were not answered satisfactorily during the war because they were of less importance to radar development than was the development of converters and mixers for new frequencies and types of service.

2·13. The Welded-contact Germanium Crystal.—A recent development in crystal units, reported by H. Q. North of the General Electric Company, has resulted in crystal rectifier units that behave very differently from any others previously observed. A description of their behavior is most easily given by an account of the experiments that led to the discovery of the unusual properties.

These crystal units were originally intended for use at 25,000 Mc/sec, and were developed as a part of a program of research on germanium

crystals. Very great care was taken in the preparation of the germanium and the cat whisker and these parts were assembled into a cartridge resembling that of the 1N26 crystal (to be described in a later section of this chapter) to allow their use in the standard r-f circuit. The whisker was supported on a glass bead which was sealed into the outside cylinder of the cartridge, and the contact was made with very light pressure. It has been observed with other germanium units that some improvement in the conversion characteristics could be obtained if the crystal was subjected to a rather large direct current for a short time before it was used. In making an experiment on this effect, North discovered that a current of several hundred milliamperes in the forward direction could be passed through the unit without apparent damage to its high-frequency characteristics. The result of this large current was that the tip of the platinum-ruthenium-alloy cat whisker became so hot that it fused and became welded to the germanium. That such a weld was produced was verified by measurement of the force required to pull the whisker away from the germanium. This force was found to be sufficient to break the whisker itself. The crystal units resulting from this process seemed at first to be comparable, in their behavior at 25,000 Mc/sec, with silicon units of more conventional design. If for no other reason, welded crystals would have been interesting because of their great mechanical and electrical stability.

Because these units did not have the same r-f characteristics as the 1N26 units, it was thought probable that their conversion loss, as measured in the test set for the 1N26, suffered considerably from reflection of the signal. As a consequence, they were tried at 3.2 cm. The 3.2-cm test set was equipped with a tunable crystal holder and it was found that, when the crystal holder was tuned for maximum delivered power, the losses of the welded units were as small as 3 db. An additional adjustment was used in the form of a d-c bias voltage in the forward direction. This bias voltage had a considerable effect on the minimum conversion loss obtainable and was retained as part of the converter circuit in all the subsequent experiments. Since the test set has the same load admittances at the signal and image frequencies, it was thought that these crystals were exhibiting the smallest loss compatible with the representation as a passive network. Therefore, a few readings of a few tenths of a decibel less than 3-db loss were considered to indicate a small error in the absolute calibration of the test set.

To verify the result obtained with the test set, the loss of a few of the best units was measured by the admittance-bridge method, described in Sec. 2·11. No resonant circuit was used to separate the image termination from the signal-frequency termination, but the result of the experiment was that the reflection coefficient, for the open-circuit switch

position and optimum load susceptance, was as large as unity for some crystals. The impedance loss was therefore unity, indicating that the same power should be available from the i-f terminals of the converter as was available from the r-f signal generator. For some crystals, the reflected wave from the crystal seemed to be a little larger in amplitude than the incident wave, but this was thought to be an experimental error. In order to obtain the best results it was necessary to adjust the level of

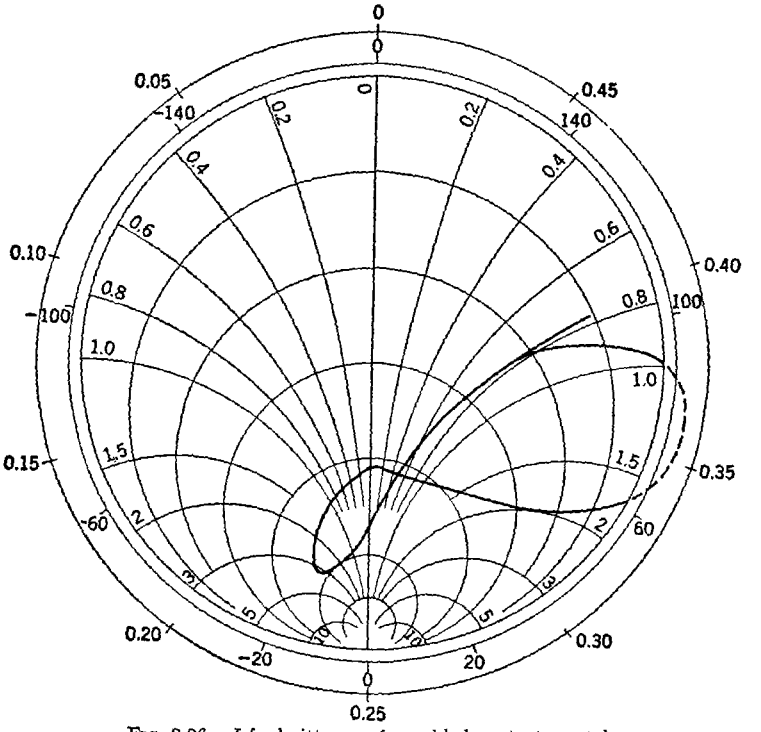

FIG. 2·26.—I-f admittance of a welded-contact crystal.

the local-oscillator power and the magnitude of the forward d-c bias voltage, and with each crystal several tests were made in search of the optimum combination of these adjustments. The experiment definitely confirmed the result of the earlier one.

In the experiment with the test set it had been found that the conversion efficiency was better if the 400-ohm i-f load resistance normally used was changed to 800 ohms. The test set measures the ratio of the available r-f power to the i-f power delivered to the load, and not the true conversion loss. Further experiments with this test set showed that still more i-f power was delivered to even larger i-f load resistances. The

loss factors became less than 3 db for many crystals and, for some, were even less than 0 db. This corresponds to an actual power gain, and it occurred without any isolation of the image terminals. An experiment was done to determine the i-f output admittance of a converter using these crystals, to discover the optimum load admittance. Since such a low loss must depend markedly on the r-f tuning, provision was made to include tuning of the r-f circuit by means of a sliding-screw standing-wave generator in the r-f-input waveguide. Local-oscillator power and a d-c bias voltage were provided. With the tuning screw inserted for a large reflection, the i-f (30 Mc/sec) admittance was measured for various positions of the screw along the waveguide. The result of this experiment is shown in Fig. 2·26, plotted on a Smith admittance chart. The significance of the extension of the contour outside the circle representing the ordinary complex half-plane, is that negative conductances were encountered for some conditions of r-f tuning. The circle of zero conductance is the normal boundary of the Smith chart, but if negative conductances are included these become circles of larger diameter and, like the circles of constant positive conductance, have centers on the real axis and pass through the infinite-admittance point.

The discovery of the negative i-f conductance of the welded-contact germanium crystals explained the experiments in which a conversion loss of less than unity was found, as well as the fact that this was obtained only under critical conditions of the r-f tuning. A device having a negative conductance can be made into an oscillator if it is loaded by a positive conductance of absolute value smaller than that of the negative conductance itself. The same device may be used as an amplifier with a true power gain if it is loaded with a conductance just too large to allow oscillation. The crystal, when used as a converter, delivered an increasing amount of power to the load as the load conductance was increased. When a resistance of several thousand ohms was used as the i-f load, a conversion gain of more than 10 db was obtained. The crystal was therefore acting as a regenerative converter. Further confirmation of the existence of the negative i-f conductance was obtained by connecting the converter to a shunt-resonant circuit, which had a shunt conductance smaller in absolute value than the measured negative conductance of the converter. Oscillation at the resonant frequency of the tuned circuit was obtained for all frequencies from 5 to 45 Mc/sec, and a later experiment at the General Electric Company revealed oscillation near 10,000 Mc/sec, when the crystal was tried in a converter with a local oscillator at 25,000 Mc/sec. A negative i-f conductance has not been produced with crystals of other types.

The d-c characteristic of the welded-contact units is also different from that of other units. A curve resembling the d-c characteristic of a

typical unit is shown in Fig. 2·27. The slope of the curve in the vicinity of the origin corresponds to a resistance of several megohms whereas the steepest part of the curve on the right side has a slope corresponding to a resistance of about 3 ohms. As mentioned previously, this part of the curve is a measure of the spreading resistance of the crystal and, with ordinary silicon units, it is about 50 ohms. On linear scales, the d-c characteristic appears to have a sharp bend in the forward direction, but the position of this bend on the voltage axis depends upon the scale of the current coordinates. A formula deduced on theoretical grounds, which expresses the relation between current and voltage applied across the barrier of the crystal in the forward direction is

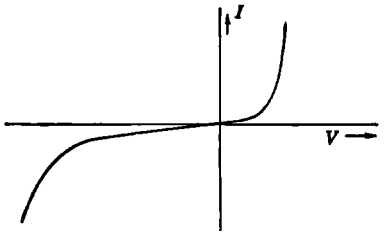

FIG. 2·27.—D-c characteristic of welded-contact germanium crystal.

$$I = A(e^{+\frac{Ve}{kT}} - 1), \tag{50}$$

where e is the electronic charge, k is Boltzmann's constant, and T is the absolute temperature. The constant A is related to the density of current carriers in the semiconductor and the area of the contact, and V is the voltage across the rectifier unit minus the drop in the spreading resistance. The d-c characteristic of the welded-contact crystal has been measured carefully and it is found to follow this formula closely over a wide range of current. When the logarithm of the current is plotted against the applied voltage on a linear scale, the plot is a straight line over six decades of current. Similar curves for other crystal units follow the formula over only two or three decades at most, and the slope does not agree closely with the formula. For the welded-contact crystal, H. C. Torrey has shown that the d-c characteristic can be used to calculate the value of the electronic charge. Using a more precise formula than Eq. (50), Torrey obtained a value for e agreeing with the accepted value within experimental error. The d-c characteristic of the welded-contact crystal thus agrees more closely with the theoretical prediction than do the d-c characteristics of the more common types.

If the d-c characteristic of a welded-contact crystal is displayed on an oscilloscope when the crystal is mounted in a converter with local-oscillator power incident, the presence of the negative conductance can be observed. For ordinary crystal units, a curve similar to that shown in Fig. 2·28 is obtained. The intercept with the current axis is the rectified current caused by the incident r-f power, and the plot shows the total current for bias voltages of both signs. The shape of the curve for a

conventional crystal is not very much affected by the r-f tuning but, when the welded-contact units are tried, the situation is changed. Depending upon the r-f tuning, a variety of curves can be produced and among them are curves resembling those of Fig. 2·29*a* and *b*. The curve of Fig. 2·29*a* is not much different from the curve for an ordinary crystal, but that of Fig. 2·29*b* clearly demonstrates the negative conductance and the fact that it is most easily obtained with a small forward bias voltage applied to the crystal. Other effects on the d-c characteristic could be obtained by adjusting harmonic-frequency admittances in specially designed r-f circuits.

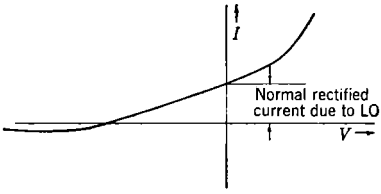

FIG. 2·28.—D-c characteristic of normal crystal with local-oscillator power incident simultaneously.

A theory of the source of the negative i-f conductance of these crystals has been given by Torrey. He has shown that the i-f conductance of a crystal can be made negative under certain conditions of r-f tuning, if the variation of the barrier capacitance with the voltage applied across the barrier is taken into account. The negative conductance should show up only in units which have very small spreading resistances, as have the welded-contact crystals, and for high-frequency local-oscillator voltages,

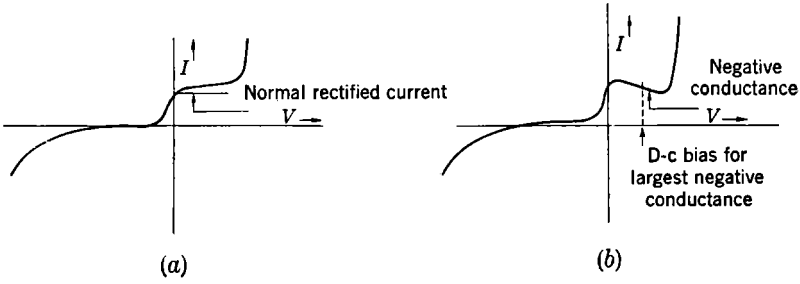

FIG. 2·29.—D-c characteristic of welded germanium crystal for two conditions of r-f tuning.

where the effect of the capacitance on the rectification efficiency is considerable. There is no possibility of producing the negative conductance in the absence of local-oscillator voltage, because it is from this source that the necessary energy associated with the negative conductance must come.

If, because its conversion gain can be made large, a crystal of this type could be used to obtain a receiver having a smaller effective over-all noise figure than is obtained with conventional crystals, it would be of great importance as a converter for a microwave receiver. Experiments by E. R. Beringer, M. C. Waltz, and C. P. Gadsden, with an apparatus

similar to one described in Chap. 8, showed that the noise power available from the converter, when the converter is operated in the condition of negative i-f conductance, was also large. As a result, it was not found possible to obtain with these crystals, in any of the many tuning conditions tried, an effective over-all noise figure smaller than can be obtained with conventional crystals. The tuning conditions tried included the use of separate tuning of the signal-frequency and image-frequency circuits, but the only advantage of the converter over one using a conventional crystal was that the greater output power allowed the use of somewhat reduced gain in the i-f amplifier. When operated in a tuning condition in which a negative i-f conductance was obtained the over-all noise figure was not very much larger than that obtained with conventional crystals. The tuning is critical, however, and a receiver, the performance of which depends on the large conversion gain, would be difficult to keep in proper adjustment.

Some attempts to make regenerative and superregenerative converters were made but they were not carried very far. The use of germanium crystals for such converters may have importance in lightweight apparatus, because the i-f amplification required could be considerably reduced. The noise power available from crystals of this type may be reduced by further research, and such a development would allow lower receiver noise figures to be obtained. The treatment of the image and harmonic frequencies in converters designed to operate with germanium crystals would be much more important than it is with the crystals in use at present. A more complete discussion of the welded-contact crystals, is given in Vol. 15 of this series.

2·14. The Converter Noise Temperature.—The noise temperature was defined in Chap. 1 and reference to it has been made in connection with the effect of the image load admittance on the loss and in the discussion of the welded-contact germanium crystal. The magnitude of the effect of a given noise temperature on the over-all noise figure of a receiver depends on the magnitude of the noise figure of the i-f amplifier. With an i-f amplifier having a noise figure of unity, a change in the noise temperature of the converter by a given factor produces a change in the over-all noise figure by the same factor. Since amplifiers with noise figures smaller than two can now be made, it is important that the noise temperature of the converter be as small as possible.

The noise temperature of a crystal converter is never less than unity. By definition, it would be unity if no excess noise were developed in the crystal itself and the noise power available from the converter were only the Johnson noise associated with the i-f output admittance. If the conversion loss of the unit were very small, the i-f admittance of the converter would have a temperature determined by the objects and the

absorbing media in the field of view of the antenna. When the noise temperature of a converter is measured, however, the antenna is replaced by an r-f resistance at room temperature and, if no excess noise were developed in the converter, the noise power available from the converter would be kTB, where T is room temperature.

As a result of the research on semiconductor crystals and on techniques of preparation and manufacture of rectifier units, the noise temperature of units now available has become considerably smaller than that of early units. The excess noise developed by the crystal unit is associated with the flow of current through the barrier; this current consists of a flow of discrete charges and, consequently, has a nonuniform character. The approximately linear relationship between the noise temperature of the converter and the crystal current, which is roughly proportional to the incident local-oscillator power, bears out the theory that the noise is similar to the shot-effect noise in a diode. If there is no incident local-oscillator power, the crystal no longer acts as a frequency converter, and the available noise power is just Johnson noise.

In order to specify the quality of a crystal as a converter, it is necessary to give the conversion loss and the noise temperature corresponding to the same amount of local-oscillator power. The magnitude of local-oscillator drive should be chosen to be the magnitude for which optimum over-all noise figure is obtained in a receiver using the crystal as a converter. The optimum local-oscillator power depends on the noise figure of the i-f amplifier following the converter. The local-oscillator drive chosen for the specification of the loss and noise temperature is that which results in the minimum over-all noise figure in a receiver using an i-f amplifier with a noise figure typical of present production. If a receiver uses an i-f amplifier with a smaller noise figure, the optimum value of the over-all noise figure is obtained with less local-oscillator drive. For best results, the optimum local-oscillator level should be determined experimentally. Since the over-all noise figure does not vary rapidly with local-oscillator drive in the region of the minimum, a small departure from the optimum local-oscillator drive does not entail a large increase in over-all noise figure.

It has been found that the noise temperature of a crystal converter, unlike the conversion loss, is not independent of the intermediate frequency at which it is measured. In general, it is found to be lower at high intermediate frequencies than at low ones, although at frequencies above a few megacycles per second the variation with frequency is not very pronounced. Since 30 Mc/sec is the most common intermediate frequency, the noise temperature of most crystals is measured at that frequency, although some are measured at 60 Mc/sec, also a common intermediate frequency.

For some purposes it is desirable to have a receiver with an i-f amplifier at a frequency lower than this, or even to connect an audio-frequency amplifier to the output terminals of a frequency converter. It is easier to make an i-f amplifier having a very narrow pass band at low frequencies than at high frequencies, and for this reason a low intermediate frequency might be desired. An audio-frequency amplifier might be used in an application such as c-w radar, where the reflected wave received differs from the transmitted frequency because of the doppler effect with a moving target. It is important to realize that the noise temperatures usually quoted for crystal converters apply at 30 Mc/sec and that the temperature at low frequencies is considerably higher. If a narrow pass band is desired, it is usually better to use a double i-f system, where the first amplifier stages operate at 30 Mc/sec or more, and a second frequency conversion is made to allow the use of a narrower, low-frequency amplifier.

Measurements, made at the University of Pennsylvania, of the noise temperature in the video- and audio-frequency range, show that the noise temperature of a crystal converter increases as $1/f$ in this range. The values common at a low audio frequency are very large. At 100 cps, a noise temperature as large as 10^5 is common. The noise figure of a receiver using an audio-frequency amplifier would be correspondingly large. The minimum signal power detectable with such a receiver would be very much larger than that detectable with a receiver having the same bandwidth but a high intermediate frequency. This same limitation is encountered when crystals are used as rectifiers for experimental purposes and small changes in the rectified current are intended to show small changes in the incident r-f power. Because of the low-frequency noise, there are slow changes in the rectified current with a fixed incident r-f power, and the fractional change in incident power which can be detected is therefore limited to a rather large value.

Usually, the noise temperature of a crystal converter is raised if a backward bias voltage (one in the direction of high resistance) is applied to the crystal. For this reason, it is advisable to keep the resistance of the circuit through which the crystal current flows as low as possible. For the purpose of filtering, resistors have been used in series with the crystal-current leads but, because the flow of crystal current through such resistors develops a backward bias voltage at the crystal unit, it is not advisable to use such resistors unless they are small or are shunted by i-f chokes of low d-c resistance. A total resistance of about 100 ohms can be tolerated in the crystal-current path without producing an appreciable deterioration in the over-all noise figure of the receiver. Since the crystal current is usually less than 1 ma, a backward bias voltage of less than 0.1 volt can be tolerated.

Specific values and an outline of the method of measurement of the converter noise temperature of crystals of various available types are given in later sections of this chapter. It must be remembered, however, that since all the standard tests are made at 30 Mc/sec and at higher frequencies, the test specifications cannot be used to estimate the noise figure of receivers using intermediate frequencies much below this.

2·15. Crystal Burnout.—In Chap. 1, the need to protect the sensitive part of a receiver was discussed in explaining the function of the duplexer common to all single-antenna radar systems. The amount of protection the duplexer must provide depends on the amount of power that can be dissipated in the input circuit of the receiver without damage. Since the best over-all noise figures are obtained with microwave receivers using crystal converters as input circuits, the more power a crystal unit can be made to withstand without damage, the less protection is required from the duplexer. A considerable part of the work on the development of crystal rectifiers, therefore, has been directed toward increasing the amount of electrical shock they can withstand without damage. Great increases in the resistance of crystals to both mechanical and electrical shock have been made. In some instances, there have been simultaneous reductions in the loss and noise temperature. This improvement is valuable for crystals intended for use in isolated receivers because, although the danger of damage from a local transmitter may not exist, accidental mechanical and electrical shocks can occur.

The crystal cartridges now available are all hermetically sealed by filling the region above the semiconductor and around the cat whisker with a wax having a low r-f loss factor. In addition to making the hermetic seal, the wax serves to support mechanically the fine wire cat whisker, and the contact is therefore made more stable against mechanical shock than it would be otherwise. There is no reason to believe that a crystal rectifier unit that was never subjected to electrical power greater than a few milliwatts, and that was never subjected to severe mechanical shock, would ever change in its characteristics. Nevertheless, the problem of burnout of the crystal converter has been one of the greatest sources of trouble in a radar system, and, as a consequence, a large amount of work has been done to reduce the frequency of occurrence of burnout. This work has been directed toward increasing the amount of protection and the lifetime of the TR switches, and toward increasing the resistance of the crystal units to damage by electrical shock. Resistance to electrical shock could be increased relatively easily at a sacrifice in the noise figure of the receiver, but this sacrifice could not be tolerated.

A crystal rectifier, to be useful at very high frequencies, must have a very small contact area. The barrier capacitance is partially determined by this contact area and, with a large contact area, the nonlinear resist-

ance of the contact is effectively bypassed by the capacitance. When a large current is passed through a crystal rectifier, heat is generated in the very tip of the cat whisker and in the semiconductor just below it, because these are the regions of highest electrical resistance. The weld of the special germanium crystals was accomplished in just this way. Unfortunately, ordinary tungsten-whisker silicon crystal units do not react favorably to such heating. Instead, the contact is destroyed, or the area of contact is made so large, by the fusion of the tip of the whisker, that the crystal is no longer a good high-frequency rectifier. A crystal that has deteriorated because it has been subjected to excessive electrical power is said to be burned out. A burned-out crystal may exhibit its deterioration as an increase in conversion loss, an increase in noise temperature, or both, if it is used as a frequency converter or, if it is used as a low-level detector, as a decrease in rectification efficiency.

2·16. Correlation between TR Leakage Power and Crystal-burnout Power.—It has already been stated in Chap. 1 that the power that leaks through a TR switch consists of two components called the "spike" and the "flat." The spike occurs at the beginning of the radar transmitting pulse and builds up with that pulse to an amplitude sufficient to initiate the arc in the TR switch. After the arc is initiated, the amplitude of the leakage signal falls abruptly to a smaller value, where it remains until the end of the transmitting period. The envelope of the pulse transmitted through a TR switch can be observed with an r-f envelope viewer. This instrument consists of a crystal detector and a video-frequency amplifier, the output voltage of which is applied to the vertical-deflection plates of a cathode-ray tube. A sweep voltage, synchronized with the pulse rate of the radar transmitter, is applied to the horizontal-deflection plates of the tube. In Fig. 2·30 a sketch of a typical trace produced by the leakage power from a TR cavity, as viewed with an r-f envelope viewer, is shown. In this sketch, and on most of the viewing systems, the peak power of the spike appears to be about twice that of the flat. The average leakage power can be measured with bolometers and is usually found to correspond to an average power for the duration of the pulse of less than 50 mw. The power level at the peak of the spike cannot be found from the trace on the envelope viewer alone, because the bandwidth of the video amplifier is not sufficient to ensure that the r-f envelope viewer responds rapidly enough to show the true magnitude of the spike relative to the flat power.

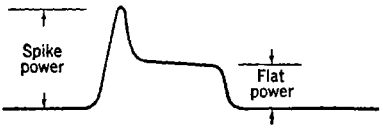

FIG. 2·30.—Envelope of the r-f pulse leakage from a TR switch as viewed with an r-f envelope viewer.

Measurements of the r-f pulse power, in 1-μsec pulses, required to

damage crystal rectifiers have been made. This power was found to be considerably larger than the 50 mw of average power that passes through the TR switches during the transmission period. Yet crystal burnout was not at all uncommon in the radar systems in which such crystals and TR switches were used. Even after crystals that could withstand several watts of r-f pulse power had been developed and the apparent safety factor was very large, the burnout problem persisted. Finally, techniques for the measurement and viewing of the spike were developed. One of these techniques consisted of a measurement of the total leakage power, by the bolometer method, and a measurement involving the calibration of the r-f envelope viewer as a power meter. Comparison of the results of these two measurements showed that the average leakage power, as indicated by the bolometric method, was considerably greater than that calculated from the height of the flat part of the leakage on the viewer, the pulse length, and the recurrence rate. Therefore, the actual peak amplitude of the spike part of the leakage is much greater than indicated by the viewer and, consequently, the time duration of the spike must be very short compared with the response time of the viewer. This was confirmed by measurement with the other method, which was accomplished with a transmission channel bypassing the TR switch and having the right phase and amplitude characteristics to produce destructive interference between the waves transmitted by this channel and by the TR switch during the time of the flat-power leakage. The subsidiary channel was adjusted until the flat power was completely canceled, and only the spike remained to be seen on the envelope viewer. The amplitude of the spike is almost entirely unaffected by the addition of the interfering channel because the spike power is transmitted through the TR switch without much attenuation, before the arc is initiated. The attenuation of the subsidiary channel is the same as that of the TR switch when it is firing, and the power transmitted by it is therefore small compared with the spike power at the time of transmission of the spike. A sketch of the trace on the r-f envelope viewer with the flat power canceled out is shown in Fig. 2·31. When the residual average power under these conditions was measured with a bolometer, it was found to correspond exactly to the discrepancy between the measurements by the first method.

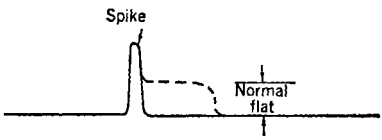

FIG. 2·31.—Leakage of a TR switch with flat power canceled out.

Because the duration of the spike was found to be so short (less than 10^{-8} sec), it was not yet substantiated whether such a short pulse could damage a crystal unit by heating, since the crystal unit must have a

nonzero thermal time constant. The time constant had in fact been estimated to be somewhat longer than the duration of the spike and, therefore, it was suspected that the damaging effect of the spike might be measured by the energy content of a single spike, independent of its peak power. Tests of the burnout characteristics of crystal units with video-frequency pulses, shorter than 10^{-8} sec but of various durations, were made and it was found that the energy was the important parameter. The methods of measurement of the spike allowed the calculation of the energy per spike pulse, and it was found that there was a much smaller safety factor of protection against burnout by the spike than by the flat leakage power. In addition, the methods of measurement and of viewing of the spike energy revealed a great dependence of the spike energy on the functioning of the keep-alive electrode of the TR tube. Improvements in the design of the keep-alive electrode and of the circuit supplying the voltage for it considerably reduced the frequency of burnout of crystals in radar systems. Consequently, the research on the burnout characteristics of crystals was directed most strongly toward measurement and improvement of their resistance to burnout by very short pulses. It was found that the burnout of crystals by the r-f spike energy correlated reasonably well with the values obtained from experiments with video-frequency pulses.

In some frequency bands, crystals of several different types, having different degrees of resistance to burnout, are now available In the 3000-Mc/sec region, for instance, the 1N21A crystals are subjected to short pulses containing 0.3 erg of energy, whereas the 1N28 crystals are subjected to pulses containing 5 ergs, before their loss and noise temperature are tested. That the increase in resistance to burnout was not achieved at a sacrifice in noise figure is evident from the fact that the limits on the loss and noise temperature of the 1N28 crystals are lower than those of the 1N21A crystals. The 1N21B units, however, have a burnout test at lower energy than the 1N28 units, and a lower limit on the conversion loss.

In addition to burnout of this instantaneous kind, it has been found that a slow deterioration with time occurs when crystals are subjected to pulses of considerable magnitude but containing insufficient power to cause a crystal to be burned out by a single pulse or by a small group of pulses. For instance, a crystal that might withstand several hundred pulses of 2 watts pulse power sometimes shows a serious deterioration over a period of operation of many days when subjected to pulses of a few hundred milliwatts pulse power recurring 1000 times per second. It is therefore advantageous to make the leakage power of the TR switch as small as possible and to make occasional checks of the crystal unit, even if no failure of the TR switch has occurred and no abrupt change in

receiver sensitivity has been observed. At power levels of a few milliwatts, crystals appear to last indefinitely if handled with reasonable care.

In this connection it should be pointed out that one of the most frequent causes of damage to crystal units is the discharge through the crystal of the electrostatic charge commonly accumulated on the body. Discharging the body capacity to the apparatus before a crystal is inserted or removed precludes the possibility of burnout by this means. In this way one makes certain that no discharging current will flow through the crystal unit. It is confusing to have a crystal burned out during the time between its testing and its insertion in the apparatus. The energy stored in the charge on the capacity of the body, even for electrostatic potentials that would not normally be noticed, is sufficient to cause burnout of some units.

In addition to damage by electrical shock, the delicate contact of the crystal rectifier unit is subject to damage by mechanical shock. The wax filling cannot prevent motion of the whisker if extreme accelerations are encountered, and, hence, it is advisable to make checks before use on all crystals that are accidentally dropped. For this purpose and for checking for damage from electrical sources, the back-resistance meter, to which reference has already been made, is a very useful and simple test device. Information on the design and use of this device is given in Sec. 2·20. In the table at the end of this chapter, a column giving limiting values of the back current at one volt, for crystals of the various types, is included.

TESTING AND SPECIFICATIONS OF CRYSTALS

In the earliest days of the development of crystal rectifiers for use as microwave frequency converters, the only specification of the quality of the crystal was the effective over-all receiver noise figure resulting with its use. The noise figure was ascertained by measurement of the r-f input signal power required to give an output signal power equal to the output noise power. In addition, the width and shape of the pass band had to be measured in order to evaluate the equivalent noise bandwidth B of the receiver. The ratio of the required input signal power to kTB is the effective over-all noise figure of the receiver. This was sufficient description of the particular receiver for which it was measured, but it did not allow computation of the expected noise figure for the same crystal with a different i-f amplifier.

The conversion loss and the noise temperature of a crystal used as a frequency converter are, together, a measure of the quality of the crystal alone. They can be used to calculate the effective over-all noise figure of a receiver using the crystal as a converter if the effective noise figure of the i-f amplifier, with a generator having an admittance equal to the i-f

admittance of the converter, is known. The first equipment for measurement of the loss and noise temperature of a crystal closely resembled an ordinary microwave superheterodyne receiver. The loss was measured by calibrating the i-f amplifier as an i-f power meter and comparing the i-f power delivered by the crystal converter with the r-f power available from the signal generator. The measurement of noise temperature was made by comparison between the values of the output noise from the receiver with the crystal in place and with the crystal replaced by an equivalent i-f resistance. From this comparison the noise temperature can be calculated, provided the effective noise figure of the i-f amplifier is known. The amplifier noise figure was measured in a standard manner by use of a temperature-limited noise diode.

This method of measurement of the quality of a crystal was rather unreliable and difficult to carry out. Simpler apparatus was subsequently developed for making the measurements of loss and noise temperature. Moreover, a burnout test was included in the specifications and a standard apparatus for this test was developed. The remaining sections of this chapter are devoted to a description of the principles of this test apparatus. It is not intended to give sufficient detail in this description to enable the reader to duplicate the apparatus but only to make clear the meaning of the test specifications. A table of some of the specifications and related data for crystals of the types now available is included at the end of the chapter.

2·17. Conversion-loss Measurement.—To measure the conversion loss of a crystal by the direct method, an accurately known amount of r-f signal power, 1 μw or less, must be available. Similarly, it must be possible to measure accurately a smaller i-f power. The frequencies of the r-f signal and the local oscillator of the converter must be such that the output signal of the converter has the frequency of the i-f amplifier that is used as a power meter. Because the conversion loss is dependent on the load admittances at the image and harmonic frequencies, the loss measured in this way can be different for the same crystal in different mixers, even if all the available signal power is matched into the converter.

To simplify the measurement of conversion loss, the "modulation method" was developed. In this method, no signal generator, separate from the local oscillator, is used and the converter output power is measured with a standard instrument. The crystal is placed in an appropriate mount, either a waveguide or a coaxial line, depending on the frequency. This mount is adjusted, on the basis of statistical data on large numbers of representative crystals, in such a way that an average crystal has the minimum loss at this adjustment of the mount. Provision is made in the crystal mount to bring out the rectified crystal current and low-frequency voltages in the same way as in a conventional mixer. The manner in

E. G. & G. LIBRARY
LAS VEGAS BRANCH

which this is done will be made apparent in the following chapters. This crystal mount is placed at the end of a similar waveguide or coaxial line, from which the local-oscillator power is applied, through a matched dissipative attenuator, at an appropriate known level. Because of the matched attenuator the local oscillator, as a signal generator, has an admittance equal to the characteristic admittance of the line. A small amplitude modulation is then introduced on the local-oscillator signal and the magnitude of the voltage thus produced at the output side of the crystal, across a resistance equal to the optimum load resistance for an average crystal, is measured by means of a sensitive a-c voltmeter. The modulation frequency is low, usually 60 cps, and an ordinary amplifying voltmeter having a full-scale sensitivity of 0.01 volt can be used. For a full-scale deflection of such a voltmeter, an i-f power of 0.25 μw is required if the load resistance is 400 ohms. If the conversion loss were 6 db, the modulation required for a full-scale deflection would be equivalent to an available signal power of 1 μw. This is found to be a small enough signal to allow the converter to behave linearly.

The amplitude-modulated local oscillator is equivalent to an unmodulated local oscillator and a signal at each of the sideband frequencies corresponding to the signal and image frequencies of a converter. This may be shown in the following way. If 2π times the local-oscillator frequency is ω, and 2π times the modulation frequency is β, the instantaneous local-oscillator voltage is

$$E = E_0(1 + m \cos \beta t) \cos \omega t, \tag{51}$$

where m is the fractional modulation and E_0 is the unmodulated amplitude. A trigonometric manipulation allows this to be written

$$E = E_0 \cos \omega t + E_0 \frac{m}{2} \cos [(\omega + \beta)t] + E_0 \frac{m}{2} \cos [(\omega - \beta)t]. \tag{52}$$

Thus, there is a signal at each sideband frequency, of amplitude $E_0 \frac{m}{2}$, or a power equal to $E_0^2 Y_0 \frac{m^2}{8}$. The incident local-oscillator power is

$$P_0 = \frac{E_0^2}{2} Y_0. \tag{53}$$

Therefore, the signal power in one sideband may be written

$$P_s = P_0 \frac{m^2}{4}. \tag{54}$$

In the measurement of loss, the incident local-oscillator power can be measured directly with a thermistor, or a Wollaston wire, in a bolometer

bridge and, therefore, the equivalent signal power can be found, provided that the modulation percentage can be measured. In one form of the loss-measurement apparatus, the modulation is produced by an eccentric rotating disk made of carbon-coated Bakelite. The disk projects into the waveguide that supplies the local-oscillator power to the mixer. The disk is so proportioned that when it rotates at a constant speed, sinusoidal modulation of the amplitude of the local-oscillator signal at the crystal results. By rotating the disk slowly the modulation percentage can be measured. The value of the loss can be calculated from knowledge of P_0 and of the delivered output power as measured by the voltmeter.

It is more common, however, to make the absolute calibration by what is known as the "incremental method" for a few crystals which are then carefully preserved as standards. If these crystals are inserted in an apparatus using electronic amplitude modulation, the level of the local-oscillator power can be set to give the proper rectified crystal current, and the a-c output meter may be made to read correctly by setting the modulation level. The incremental d-c method may be regarded as an extrapolation of the modulation method to zero frequency. A sensitive current meter is so connected that it measures a small fractional change in the rectified current. This change in the rectified current is produced by a small, known, percentage change in the r-f power. If the change in current and the differential admittance of the crystal to DC are known, it is possible to calculate the output power that would be produced if the change in incident power were repeated sinusoidally. With a set of a few crystals calibrated as primary standards in this manner, any number of crystals may be calibrated with a modulation-method apparatus for use as secondary standards at the many locations where modulation-method apparatus is used. The use of several standards is a protection against changes or damage in any one of them, since a change in a crystal will immediately be discovered because of disagreement with its calibration when the instrument is adjusted to read correctly for the others.

The loss, as measured in the test, is not exactly the loss that is used for the calculation of noise figures, except for some special cases, although the measured loss does not differ greatly from the loss appearing in the formula for the effective over-all noise figure of a receiver. The i-f load of the testing apparatus is fixed at a value equal to the i-f output admittance of an average crystal, and the power delivered to it—not the available i-f power—is measured. Under the conditions of measurement, the i-f output admittance of most crystals does not differ from the load admittance by an amount causing a loss, due to mismatch, of more than a few tenths of a decibel. Because the tuning of the crystal holder is fixed, crystals having signal admittances that differ from that of an average crystal are not tuned for minimum conversion loss. Both of these

factors tend to make the measured loss greater than that which could be obtained from a given crystal if both the i-f load admittance and the r-f tuning were adjusted to the optimum values.

In the calibration of the apparatus, each sideband signal contributes a component to the low-frequency output voltage. There is a phase relationship between the local-oscillator signal and each sideband such that two modulation-frequency components at the output terminals of the crystal are in phase, because they arise from amplitude modulation. The output voltage, therefore, is twice as great as it would be if there were only one signal having the same amplitude as one of the sideband signals. The loss, therefore, is computed assuming a signal amplitude twice that of a single sideband component, or a signal power twice that available in the two sideband signals. When the calibration is made in this way, the loss obtained is, except for the mismatch factors, that which would result if conversion were made from a single signal frequency to the intermediate frequency and if the r-f tuning at the signal frequency were identical with that at the image frequency. As was shown in Sec. 2·10 the minimum loss that a converter, representable as a linear passive network, can possess under these conditions of tuning is 3 db. This corresponds, in the modulation-method test, to conversion of all the available signal power in the two sideband signals into low-frequency power. A crystal for which this is true shows a 3-db loss according to the calibration. Thus, a crystal that shows less than 3-db of loss in this apparatus, as do the welded-germanium units, delivers to the load resistor more power than is available in the input signal. Such a crystal converter cannot be represented by a passive network, although it may still be linear, and the excess power must be derived from the local-oscillator wave, the bias supply, or both.

In the specification tests of crystals there is no explicit measurement of the r-f admittance in a particular mount nor, except for one type of crystal, of the i-f admittance. Because the loss measured is the ratio of the equivalent available r-f power to the i-f power delivered to a fixed load, and not the ratio of this r-f power to the available i-f power, a limit is implicitly imposed on the range of admittances possible. Crystals having r-f or i-f admittances greatly different from the average must also posses a minimum conversion loss considerably below the specified limit to pass the loss test. Such crystals are not often found because the upper limit on the loss is not very much greater than the average loss for crystals of a given type. The fact that some reflection loss can occur at the single frequency of the test does not allow much margin for frequency-sensitive behavior in a circuit that must operate in a wide band since reflection loss increases much more rapidly with the degree of mismatch after the first few decibels. If all of the mismatch loss were to occur on the output side

of the test converter, the possible scatter of the i-f admittances of many crystals, from this cause, combined with the effect of the image-frequency termination when a high-Q TR cavity is used, could pose a considerable problem to the designer of the i-f input circuit. Fortunately the i-f admittance seems to be fairly uniform from crystal to crystal under the conditions of the test. The loss caused by r-f mismatch is usually greater than that caused by i-f mismatch because the crystal cartridge represents a fairly sizable circuit element compared with the r-f wavelength and therefore its r-f admittance is determined not only by the semiconductor and contact but by all of the discontinuities and dimensions of the cartridge. The i-f admittance is determined by these things only in so far as the r-f tuning affects the i-f admittance, which is very little because of the buffering effect of the conversion loss.

2·18. Noise-temperature Measurement.—Because the noise temperature is dependent upon frequency, it must be measured at the intermediate frequency to be used. For this reason the noise-temperature test equipment resembles a complete superheterodyne receiver much more closely than does the loss-test apparatus. As is also true for the apparatus used to measure loss, the noise-temperature test equipment used at present is similar in principle for all microwave frequency ranges and differs primarily in having r-f circuits in a medium suitable to the particular frequency. Thus the 3000-Mc/sec test sets for loss and noise-temperature measurements utilize principally small coaxial lines, and the crystal mounts are of a coaxial-line type. The test sets for 9280 Mc/sec and that for 25,000 Mc/sec, on the other hand, use appropriate waveguide transmission lines and crystal mounts.

A block diagram of the present form of the noise-temperature measurement apparatus is given in Fig. 2·32. The local-oscillator power enters the mixer through a filter cavity in order to minimize any spurious noise that might enter at either of the sensitive sideband frequencies. Attenuators are used on both sides of this filter, to ensure that the filter does not pull the oscillator frequency badly and to provide a matched line looking from the mixer back toward the local oscillator. The mixer is identical with the one used in the corresponding loss-measurement apparatus and the level of the incident local-oscillator power is set to be the same as in the loss apparatus. The input terminals of the i-f system can be switched from the output terminals of the mixer to a fixed dummy resistor for purposes of comparison. Between the output terminals of the mixer and the preamplifier is a lumped-constant circuit. This circuit transforms the input admittance of the i-f amplifier to a value equal to the complex conjugate of the output admittance of the mixer with an average crystal. In addition, the transformer has such characteristics that it is equivalent to a transmission line having a characteristic admittance equal

to the output admittance of the mixer with an average crystal and having a length equal to five-eighths of a wavelength at the intermediate frequency. The function of this circuit is to make the output noise of the receiver

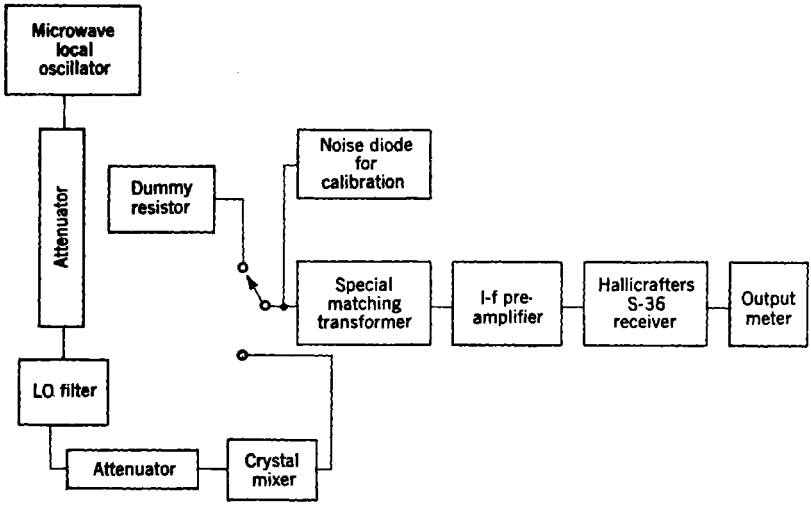

FIG. 2·32.—Block diagram of noise-temperature test apparatus.

independent of the i-f admittance of the converter provided that it is real and has a noise temperature of unity. It is this circuit that makes the apparatus better suited to the measurement of noise temperature than an ordinary receiver.

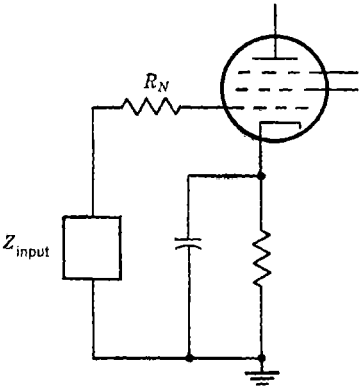

FIG. 2·33.—Equivalent circuit of i-f input amplifier.

The output noise of an amplifier may be regarded as arising primarily in the input stage of that amplifier and ahead of it, provided the input stage has sufficient gain to make the contribution to the total output noise from other stages negligible. In the apparatus under discussion, this condition is fulfilled, and if the only sources of noise are Johnson noise and noise arising in the tube, the circuit may be represented by Fig. 2·33, to an approximation sufficient for the present purposes. The grid of the tube is considered to have no admittance, and the noise generated in the tube is considered to be caused by the Johnson noise in the resistance R_n

at room temperature. The impedance Z_{input}, or its reciprocal the input admittance, may be considered to be made up of the input admittance to the tube plus all admittances associated with the circuit connected to the input terminals of the amplifier. In the case in question, however, the input circuit includes the i-f admittance of the mixer, transformed by the special circuit between the mixer and the amplifier, and a conductance added from grid to ground. The total effective circuit may be represented by the equivalent circuit shown in Fig. 2·34. The i-f admittance of the mixer is made real by an added susceptance and, for a crystal having the average i-f admittance, the transformation effect of the input circuit is such that the admittance at the output terminals of this circuit is equal to g_0. Thus the only elements appearing in the circuit of Fig. 2·34 are the transformed i-f conductance g of the mixer with its associated noise-current generator i, the conductance g_0, made up of the input

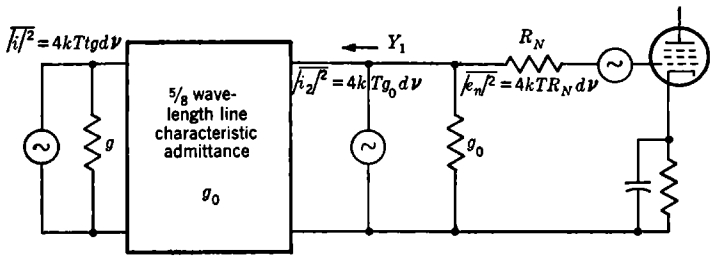

FIG. 2·34.—Equivalent circuit of mixer, five-eighth-wavelength line and input amplifier.

conductance of the tube and an added resistor with its associated noise-current generator i_2, and the equivalent noise-generating resistance for the tube with its associated noise-voltage generator e_n. Each of the noise generators generates a noise current or voltage given by the thermal-agitation equation. The temperature of the i-f conductance of the mixer is t times room temperature, and the temperature of the other resistors is room temperature.

The admittance of the output terminals of the transmission-line section may be obtained from the general transmission-line equation, which for a line having no loss is

$$Y_1 = Y_0 \frac{Y_t + jY_0 \tan \beta l}{Y_0 + jY_t \tan \beta l}, \tag{55}$$

where β is $2\pi/\lambda$ for a distributed-parameter line, l is the line length and Y_1 is the admittance of the pair of terminals at one end when an admittance Y_t is connected to those at the other end. In the present case, the admittance of the output terminals of the five-eighth-wavelength line is

$$Y_1 = g_0 \frac{g + jg_0}{g_0 + jg} = g_0 \frac{2gg_0 + j(g_0^2 - g^2)}{g_0^2 + g^2}. \tag{56}$$

A new equivalent circuit may now be drawn, eliminating the transmission line, as in Fig. 2·35. The magnitude of the noise current associated with the mixer is found from the fact that the noise power available at the output terminals of the line is the same as that from the mixer, since the

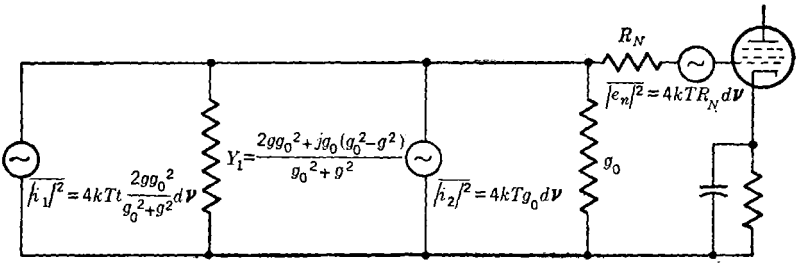

FIG. 2·35.—Transformed equivalent circuit.

line is lossless. The mean square $\overline{|i_0|^2}$ of the noise current induced in the input conductance g_0, in a narrow frequency band $d\nu$, is

$$\overline{|i_0|^2} = [\overline{|i_1|^2} + \overline{|i_2|^2}]\frac{g_0^2}{|g_0 + Y_1|^2}, \tag{57}$$

where $\overline{|i_1|^2}$ and $\overline{|i_2|^2}$ have the values shown in Fig. 2·35. The noise voltage developed across the conductance g_0 is

$$\overline{|e_0|^2} = \frac{\overline{|i_0|^2}}{g_0^2} = \frac{\overline{|i_1|^2} + \overline{|i_2|^2}}{|g_0 + Y_1|^2}. \tag{58}$$

The substitution, from Eq. (56), for Y_1 and the insertion of the values of $\overline{|i_1|^2}$ and $\overline{|i_2|^2}$ in terms of the conductances, reduces Eq. (58) to

$$\overline{|e_0|^2} = \frac{4kT}{2g_0}\,d\nu\left[1 + (t - 1)\frac{2gg_0}{(g + g_0)^2}\right]. \tag{59}$$

The mean square of the total input noise voltage is the sum of this voltage and the voltage arising from the noise resistance of the tube, or

$$\overline{|e_t|^2} = \overline{|e_0|^2} + \overline{|e_r|^2} = 4kT\left\{\frac{1}{2g_0}\left[1 + (t - 1)\frac{2a}{(1 + a)^2}\right] + R_n\right\}d\nu, \tag{60}$$

where the ratio g/g_0 has been written as a. The admittance transformation of the input circuit is used to make the value of $1/2g_0$ comparable with that of R_n, which, for a typical pentode 30-Mc/sec amplifier tube, is about 2500 ohms.

Equation (60) describes the behavior of the test set. First, let us suppose that the mixer has a noise temperature of unity, or that a resistor

at room temperature is substituted for the mixer at the input terminals of the coupling network. The term that depends on the conductance at the mixer terminals is then zero and the output noise power of the amplifier is independent of the conductance, provided that the noise examined is only that contained in a narrow frequency band, in which the transformation effect of the input circuit may be considered to be independent of frequency. In practice, a fairly narrow-band communications receiver is used, following a preamplifier. If the noise temperature of the mixer is not unity, the contribution is a maximum if a is equal to unity. The contribution falls to 80 per cent of the maximum value, for the same value of t, if a is as much as a factor of 2 larger or smaller than unity. The increase in the output noise power from the amplifier with a crystal in the mixer, over that with the amplifier connected to the resistor, is proportional to $t - 1$.

To calibrate the apparatus, the value of R_N could be measured and an output meter measuring noise power at the output terminals of the amplifier could be used. Instead, the apparatus is calibrated in such a manner that the value of R_N need not be known, and a meter having any law of response can be used at the output terminals of the amplifier. For this purpose the noise diode is included in the circuit. This diode is a specially constructed tube having a tungsten filament and short leads. The magnitude of the plate current of the diode is controlled by the temperature of the filament, and a plate voltage sufficient to ensure saturation current for all filament temperatures is applied. Thus, space-charge smoothing of the plate current is eliminated. Under these conditions, the mean-square fluctuation components of the plate current, in a given frequency band, caused by the shot effect can be calculated. Diodes that are used for the measurement of amplifier noise figures in this way are called temperature-limited diodes. Figure 2·36 shows a possible circuit for utilization of such a noise diode, where R_1 is the i-f resistance of the mixer, equal to $1/g$, and R_2 is the resistor included for comparison purposes.

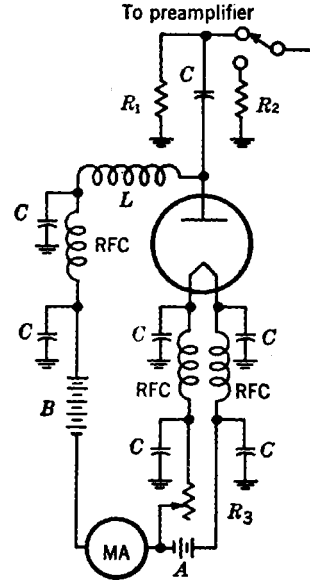

FIG. 2·36.—Possible circuit for utilization of noise diode.
C = bypass condenser (1000 $\mu\mu$fd at 30 Mc/sec).
RFC = intermediate-frequency choke.
R = filament rheostat.

The noise diode may be considered as a noise generator with a mean-square noise current given by

$$\overline{|i_d|^2} = 2eI\,d\nu, \tag{61}$$

where I is the diode plate current, e is the electronic charge, and $d\nu$ is the narrow band of frequencies being examined. If a resistor of conductance g is put into the mixer in place of the crystal, the mean-square thermal noise current in this resistor is

$$\overline{|i_g|^2} = 4\,kTg\,d\nu. \tag{62}$$

Therefore, the total mean-square noise current in the resistor is

$$\overline{|i_t|^2} = \overline{|i_d|^2} + \overline{|i_g|^2} = 2eI\,d\nu + 4kTg\,d\nu. \tag{63}$$

The resistor may be regarded as having a noise temperature t given by

$$t = \frac{\overline{|i_t|^2}}{\overline{|i_g|^2}} = 1 + \frac{2eI}{4kTg}. \tag{64}$$

The standard temperature for purposes of such calibrations is taken as that which makes e/kT equal to 40 per volt and corresponds to a temperature just less than 20°C. Thus Eq. (64) becomes,

$$t = 1 + 20\,\frac{I}{g}. \tag{65}$$

The calibration of the noise-temperature measurement apparatus can thus be made by observing the output meter at several values of diode current with each of several resistors having different conductances in place of crystals in the mixer. A typical calibration curve for an output meter giving readings proportional to power is shown in Fig. 2·37, where the ordinate is the output-meter reading on a linear scale and the abscissa is the value of a on a logarithmic scale.

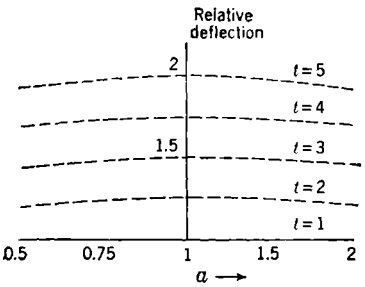

FIG. 2·37.—Typical calibration curves for noise-temperature measurement set, with special input circuit.

In practice, the input transformer is a lumped-constant π-network. This circuit contains several variable condensers which must be tuned properly. When the condensers are correctly adjusted, the output-meter reading is independent of the conductance of the resistor placed in the mixer and is the same for the switch in the position that connects the dummy resistor to the amplifier input terminals.

Unfortunately, this special input circuit does not work so well for the measurement of the noise temperature of a mixer that has a reflection of the image-frequency wave. It has been shown in Sec. 2·11 that such a reflection can give rise to a susceptance component in the i-f admittance of the mixer and such a component would upset the adjustment of the special input circuit.

For mixers not having reflections at the image frequency, the noise-temperature measurement apparatus can be used to measure the i-f conductance as well as the noise temperature, by use of the temperature-limited diode. The diode plate current required to cause a given deflection of the output meter is dependent on the magnitude of the conductance at the output terminals of the mixer. A calibration can be obtained using resistors in the mixer. Then a measurement of the diode current needed to produce a given deflection on the meter with a crystal in the mixer constitutes a measurement of the i-f conductance of the mixer, if a square-law (power) meter is used.

2·19. Burnout-test Apparatus.—To simulate the spike energy as a cause of crystal burnout, the apparatus used to test crystals for susceptibility to burnout subjects a crystal to a very short video pulse. The specifications for most types of crystals require all units to be subjected to a pulse of this sort before they are tested for loss and noise temperature. Crystals intended for use as low-level detectors, on the other hand, because they are not commonly used in systems having duplexers, are rarely subjected to "spike" pulses but are more frequently burned out through the presence of powerful radar transmitters in the immediate vicinity. Therefore, the pulses to which such a crystal might be subjected would more likely be ordinary radar pulses of about 1-μsec duration. Less attention is paid to the burnout characteristics of such crystals, as a consequence.

The apparatus developed by H. C. Torrey for the burnout test of mixer crystals consists of a short piece of coaxial line, connected at one end through a high resistance to a source of d-c voltage which charges the line to that d-c voltage. The crystal to be treated with a burnout pulse is inserted into a holder at the other end of the line but not put into contact with the center conductor. A sudden contact of the center conductor with the pin end of the crystal cartridge is made by dropping the center conductor a short distance onto the cartridge tip. This discharges the line in a single pulse through the crystal in a time approximately equal to $2l/c$ where l is the length of the line and c is the velocity of light. The length of the line is made such that the pulse length is about 5×10^{-9} sec. This time is so short that the burnout of the crystal depends upon the pulse energy and not upon the pulse power. The energy delivered to the crystal is just the energy stored in the capacitance

of the line and this is easily calculable from the size of the line and the voltage. In this way a single pulse of uniform energy is delivered to each crystal before it is tested for loss and noise temperature. If it has been damaged appreciably by this pulse it will not pass these later tests and therefore no electrically fragile crystals should find their way into service. The correlation between burnout by a video pulse of this kind and burnout by an actual r-f spike pulse has been found to be good and, therefore, this simple technique has been adopted in preference to an r-f burnout test.

The value of the energy of the pulse used depends on the type of crystal being tested, as will be evident from the table at the end of this chapter. The lower-frequency units can, in general, stand a larger amount of energy before burnout occurs because the area of the contact of the cat whisker and the semiconductor is larger. Also there are available, in some frequency ranges, units that have high burnout resistance and high loss, as well as units that have the lowest possible loss and reduced burnout resistance. This is not obvious from the table, however, because some types with high loss and noise-temperature limits but with small burnout energy, or no specification of burnout at all, are also listed. These are obsolete or obsolescent types having characteristics inferior to the more recently designed types designated by the same code number followed by a letter A, B, or C. The lower limits on the loss and noise temperature as well as the higher resistance to burnout of later types are illustrative of the progress made in the design of crystal units through the intensive research that was carried on during the war.

For the burnout test of crystals for which the burnout specification is given in terms of watts of pulse power in a 1-μsec pulse, a video pulse is also used, but the pulse is formed by a lumped-constant pulse-forming network which is discharged through the crystal unit. The pulse power delivered depends upon the admittance of the crystal unit at this level relative to the characteristic admittance of the network. The specification is the available power, but this power is dissipated by the crystal only if the crystal admittance matches that of the network. The network admittance is chosen to be approximately equal to the crystal admittance at this power level and, therefore, the available power is not greatly different from the power actually delivered.

The burnout specifications, like the other specifications, were determined on the basis of tests of representative units, rather than being arbitrarily set up as minimum acceptable requirements. When research and improved manufacturing techniques indicated that it was easy to produce large numbers of crystals passing existing specifications without large "shrinkage," a new set of specifications was written for a crystal

with a different type number, usually the old number with the added *A* or *B*. In this way the improvements found possible on a laboratory scale were quickly reflected in improved production types. The result is that the crystals available at present represent a great advance in both burnout and noise-figure characteristics relative to those available only on a laboratory scale in 1942.

2·20. The D-c Crystal Checker.—The fact that there has been shown to be a reasonably good, if not perfect, correlation between the back resistance of crystal units of one type and their noise-figure characteristics has been mentioned earlier. The correlation is sufficiently good to enable it to be said that a crystal of a particular type, passing more than a given back current at a given applied voltage, has probably been burned out. Perhaps more important is the fact that a unit passing less than this given current has almost certainly not been damaged severely. Without a check as simple as this, the service problem of microwave receivers under field conditions is rendered very difficult because there are many possible sources of trouble other than the crystal. By this test the condition of the crystal can be quickly determined; if the crystal is not at fault, another source of trouble may be investigated. In addition, a simple check makes possible periodic checks of operating crystals, allowing slow deterioration which might otherwise go unobserved to be watched and not allowed to proceed far enough for it to be detrimental to the performance of the receiver.

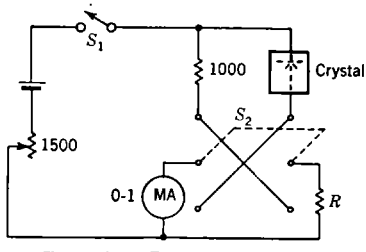

FIG. 2·38.—D-c crystal checker.

The limiting back current is known, for most of the available crystal units, for 1 volt of potential difference across the unit. A circuit diagram of a test unit that can be used to make this check is given in Fig. 2·38. A switch S_1 is used to turn the unit on and off, and a second switch S_2 enables the single meter to be used, with the switch in the upper position, to adjust the potential across the test crystal to 1 volt. In the lower position the current through the crystal is read on the meter. The position in the circuit of the meter and of a resistance *R*, equal to the meter resistance, are interchanged by the switch S_2 and, therefore, the current through the crystal is the same for either switch position.

The value of the maximum back current at 1 volt for a relatively undamaged crystal, has been found to be dependent upon the crystal type only, and not upon the manufacturer, with one exception. For the 1N26 crystal, it was found that the limit on the current was sufficiently

different for crystals of the two manufacturers to warrant the use of a value for each. These values as well as the single ones for the other types, where known, are included in the table of specifications at the end of this chapter although they are not to be considered as specifications. It is possible that the safe currents will change for crystals produced in the future under the same specifications, because there is nothing included in the specifications which relates directly to them. If it is desired to guard against any amount of deterioration no matter how small, it is perhaps best to keep a record of the back current at 1 volt for each crystal, from the time it is first used and to be suspicious of the crystal if it shows any tendency to pass greater current with use. If a number of crystals show such a change upon insertion into an operating mixer it is to be taken as evidence that the TR switch or some other part of the circuit is allowing the crystal to be damaged by excessive electrical power. It is worth while to repeat the caution about static charge on the body when handling crystals, and the importance, therefore, of grounding the body to the apparatus through a path other than the crystal while it is being inserted or removed. Care should be taken to be sure that the apparatus is electrically grounded. A considerable a-c voltage with respect to ground may be present, especially if the apparatus contains a filter in the a-c line. Many crystals have become damaged because of this, and it is advisable to take appropriate precautions to eliminate such a voltage.

2·21. Specifications and Relevant Information on Available Types.—Table 2·1, to which reference has been made many times throughout the chapter, follows. The table gives the specifications as well as other information on the various types of crystals currently available for use as detectors and mixers in the microwave region. There are two general types of cartridge, and the one applying to each crystal is indicated in the first column of the table as A or B. These symbols refer, respectively, to cartridges like those shown in Figs. 2·39 and 2·40. An outline of the physical dimensions, with tolerances, is given for each of these cartridges. This is an important factor in the design of mixer and detector mounts since considerable nuisance is encountered if the mount is designed on the basis of the dimensions of only a few units. The large ceramic unit was originally used at 3000 Mc/sec in a coaxial-line mount where it is small compared with the dimensions of a convenient line, or compared with the wavelength. Later, crystals for the 3-cm region were built in the same cartridge. In this region the cartridge is still not large compared with the dimensions of conventional rectangular waveguides in which it is mounted. For 25,000 Mc/sec, this unit is excessively large compared with either the waveguide dimensions or the largest single-mode

coaxial line at that frequency. Consequently, the coaxial type of cartridge of Fig. 2·40 was developed by Bell Telephone Laboratories. It has much smaller internal dimensions in accordance with the use at shorter wavelengths. There has been some use of this same cartridge for units recently designed for lower frequencies because of the shielding of the sensitive contact from stray radiation and because of the smaller physical dimensions. There is, in addition, less probability of damage through

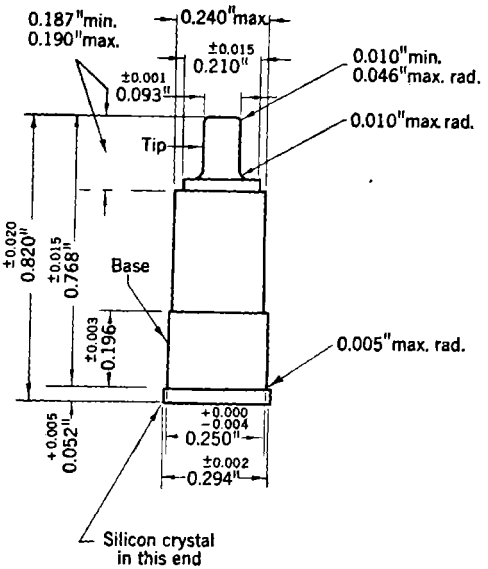

FIG. 2·39.—Ceramic crystal cartridge.

Note 1. Eccentricity between tip and base shall not exceed 0.0075.

Note 2. Metal parts shall be silver-plated min. 20 mg/in² or gold-plated min. 10 mg/in².

Note 3. Used for types: 1N21, 1N21A, 1N21B, 1N23, 1N23A, 1N23B, 1N27, 1N28, 1N29.

This drawing is taken from BuShips Dwg. RE 38A192.

static discharge from the body, since the mount is so constructed that contact to the outside cylinder will almost certainly occur before the discharge can go through the crystal.

The table gives, next, the use for which the crystal is intended, either as a low-level "video" detector or as a mixer unit. The next column is the frequency of the specification tests. For mixer crystals, the local-oscillator power level to which the loss and noise specifications refer is given, then the minimum rectified current, measured by a meter of 100-ohms resistance, and then the maximum acceptable values of loss and noise temperature. For some crystals the i-f resistance under the conditions of operation in the test set is specified, and, if so, it is given in

the next column. For most crystals this is not specified and, for these, the value of the load resistance used in the loss test is indicated by the

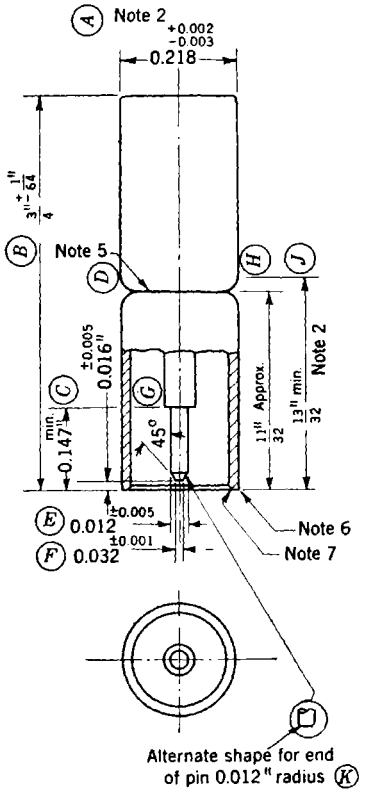

FIG. 2·40.—Shielded coaxial crystal cartridge.

Note 1. Finish: plate with 0.00002 tin over nickel flash or 0.0001 gold or silver.

Note 2. OD dimension applies to length indicated.

Note 3. Axis of center conductor not to deviate from axis of outer conductor referred to its outside diameter more than 0.004.

Note 4. The polarity is such that sleeve is positive when current flows in the pass (forward) direction.

Note 5. Crimp permissible but adjacent surface shall not be bulged beyond maximum diameter.

Note 6. This edge to be sharp and free from burrs.

Note 7. Slight chamfer permitted.

Type test following: *F*, *H*, notes 1 and 4, 5, and 7.

Design test following: *B*, *D*, *J*, *K*, *G*.

Production test all other dimensions and notes.

This drawing is taken from BuShips Dwg. RE 38A208.

numbers accompanied by TL for "test load." The "video" output resistance is given in this same column for low-level detectors and the next column gives the figure of merit *f*. Following this comes a column

TABLE 2·1.—CHARACTERISTICS AND SPECIFICATIONS OF CARTRIDGE CRYSTAL UNITS

Type of crystal	Type of cartridge	Use	Test freq., Mc/sec	LO power, mw	Min. rectified current, ma	Max. loss, db	Max. noise temp., times	I-f or video resist., ohms	Min. fig. of merit	Burnout pulse	Over-all noise fig. 5-db amplifier, db	Back current limit at 1 volt, ma
1N21	A	Mixer	3060	0.5	0.4	8.5	4	.....	...	.....	16.4	0.40
1N21A	A	Mixer	3060	0.5	0.4	7.5	3	300 TL	...	0.3 erg	14.6	0.175
1N21B	A	Mixer	3060	0.5	0.4	6.5	2	400 TL	...	2.0 erg	12.7	0.125
1N21C	A	Mixer	3060	0.5	0.4	5.5	1.5	400 TL	...	2.0 erg	11.1	0.125
1N23	A	Mixer	9375	1.0	...	10.0	3	300 TL	...	0.3 erg	17.1	0.40
1N23A	A	Mixer	9375	1.0	...	8.0	2.7	300 TL	...	1.0 erg	14.9	0.30
1N23B	A	Mixer	9375	1.0	...	6.5	2.7	300 TL	...	0.3 erg	13.4	0.175
1N25	A	Mixer	1000	1.25L 0.9t	...	8.0	2.5	100–400 200 TL	...	6.5 watt	14.7	.....
1N26	B	Mixer	24,000	1.0	...	8.5	2.5	300–600 300 TL	...	0.1 erg	15.2	0.11 WE 0.23 SEP
1N27	A	Detector	3295	.....	...	....	...	4000 max.	60	.....	....	.....
1N28	A	Mixer	3060	0.4	0.4	7.0	2.0	.....	...	5.0 erg	13.2	.....
1N30	A	Detector	9375	.....	...	....	...	7000– 21,000	·55	0.3 erg	....	.....
1N31	B	Detector	9375	.....	...	....	...	6000– 23,000	55	0.02 watt design	....	.....
1N32	A	Detector	3295	.....	...	....	...	5000– 20,000	100	0.36 watt design	....	.....

giving the pulse energy of the burnout test, or the peak power where appropriate. For some types the number in this column is labeled "design." This means that the test is made only on a few sample units and the number then represents only the approximate power that units of this type may be expected to withstand. Next comes a column of over-all noise figures for a receiver using mixer crystals that just pass both the loss and noise-temperature tests and having an r-f amplifier with a noise figure of 5 db. This is by no means to be considered as the best noise figure possible with that type of crystal since some units show losses as much as 2db less than the maximum values, and noise temperatures effectively equal to unity. Moreover, the 5-db i-f-amplifier noise figure is by no means the lowest obtainable; values as low as 1.5 db have been obtained with some recent circuits. A combination of such an amplifier with the best 1N21B crystal at 3000 Mc/sec would give an over-all noise figure of about 6.5 db. At 10,000 Mc/sec such noise figures are also possible with the 1N23B and at 25,000 Mc/sec over-all noise figures of about 7.5 db have been observed. Finally a column of maximum back current at one volt, as discussed in Sec. 2·20, is given. For the 1N26 crystal, two numbers are given, one followed by SEP standing for Sylvania Electronic Products Company, and the other by WE for Western Electric Company, the two manufacturers producing these units at present.

The region of frequencies near the test frequency is not the only region in which a unit may be used. In general, however, the units would be expected to show greater conversion loss at higher frequencies, although an increase of frequency of 10 or 20 per cent would not produce a serious effect. The use of the units at lower frequencies will certainly not result in a greater loss and can, in fact, result in slightly lower loss, especially for the high-burnout units having relatively high loss at the high frequency. Because the units are not tested at these lower frequencies, however, there is no implicit control over the r-f admittance characteristics. Therefore, the admittances of the various units would not necessarily be very uniform or have any relationship to that of units designed for this frequency.

In addition to the development of microwave crystal rectifiers, there has been considerable work done on units for special purposes at lower frequencies. As an example, there are units for use as diodes in such applications as second detectors in superheterodyne receivers and as d-c restorers in special circuits where their characteristics and small physical size make them more desirable than ordinary diodes. This subject is not within the scope of this volume and for details of the properties of such crystals the reader is referred to Vol. 15 of this series.

CHAPTER 3

SIMPLE MICROWAVE CRYSTAL MIXER CIRCUITS

Some of the devices which have come to be known as "mixers" or "converters" in the microwave range perform the function of converting a received signal at a microwave frequency into one at a lower intermediate frequency, in addition to several other secondary functions which are special requirements of their application in microwave radar. Some of these additional functions will be described in later chapters; the purpose of the present chapter is to discuss in some detail the considerations involved in the design of crystal mixers that perform, in conjunction with the local oscillator, the single function of frequency conversion of a microwave signal.

There are many possible variations in the design of a mixer for a particular frequency region and it will not be possible to give details of each of the types in current use. The examples cited will usually be those of designs evolved at the Radiation Laboratory and these cannot be considered as the only possible ones. It has been the attempt, in designing these circuits, to make a single unit as a basic design for each frequency range for which a particular type of transmission medium is used in order to avoid the much greater labor involved in designing a particular unit for each piece of equipment and to allow as wide a tuning range in the equipment as possible.

The problem of the design of crystal-mixer circuits cannot be treated with any degree of finality because the details of the mixer best suited to a particular task depend, to a larger degree than do other microwave circuits, on things outside of the control of the designer. The design must, for instance, be influenced primarily by the physical and electrical characteristics of the available crystal units. Since there is reason to believe that improvements may lead to units considerably different from those available at present, one may expect that mixer designs for such future units will be correspondingly changed. The frequency ranges covered by designs for radar use are by no means the only important ones; hence, for many purposes, the details of these designs are not of general interest. Unlike the purely microwave circuits, the mixer cannot be adapted from one frequency band to another by a simple scaling process because the crystal unit, which plays such a dominating role in the operation of the circuit, will neither have the same characteristics in the scaled circuit nor be scalable in itself. The detailed designs that will

be given as examples, therefore, will probably be of less general interest than would warrant the inclusion of a large number of them. More emphasis will be put on the general methods and ideas that have been used in the design of the mixers, in the belief that analogous courses may be taken for frequency bands and uses other than those encountered in the Radiation Laboratory experience.

3·1. The Basic Mixer Circuit.—One of the simplest possible circuits that a mixer can have is that of Fig. 3·1. In this circuit, the antenna or signal generator is represented by the current generator delivering a current i_α and having an internal admittance Y_α, and the local oscillator by the current generator producing a current i_ω and having an internal admittance Y_ω. These two generators are connected in parallel through

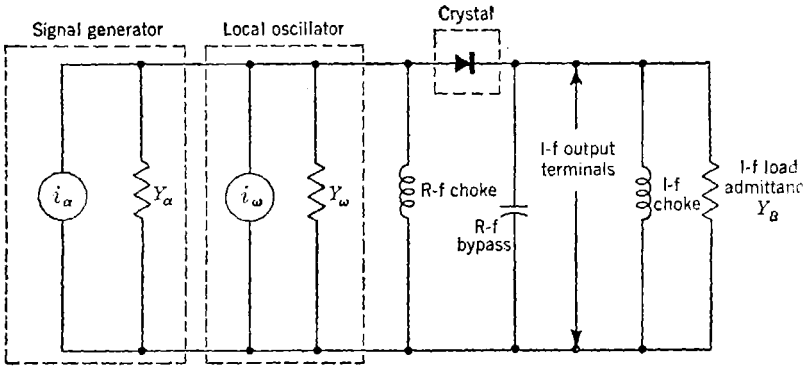

FIG. 3·1.—Equivalent circuit of simple mixer.

the crystal unit to the i-f output terminals which, in use, would be connected to the input circuit of the i-f amplifier. In the diagram, a load circuit presenting an i-f load admittance Y_β, and a low-resistance d-c circuit are shown. As shown in Chap. 2, the r-f tuning of the mixer should be set with a matched i-f load admittance in place.

The functions of the various parts of the circuit are the following. The magnitude of the local-oscillator current establishes, in conjunction with the i-f load admittance, the input admittance of the mixer to the small signal from the signal generator. The r-f choke on the one side of the crystal unit and the i-f choke on the other provide a low-resistance path to the rectified current. The crystal, therefore, does not become appreciably biased by the rectification of the local-oscillator signal. In order that the r-f voltages of both the signal and the local oscillator may be impressed primarily across the crystal unit, an r-f bypass condenser is provided across the i-f output terminals. For maximum power delivered to the i-f load, this capacitance must either have a negligible susceptance

at the intermediate frequency or be resonated with an opposite susceptance component in the i-f load admittance.

The basic mixer is most easily understood when the conversion loss of the crystal is large. Under this condition the r-f and i-f aspects of the mixer circuit may be considered separately because the effect of the load

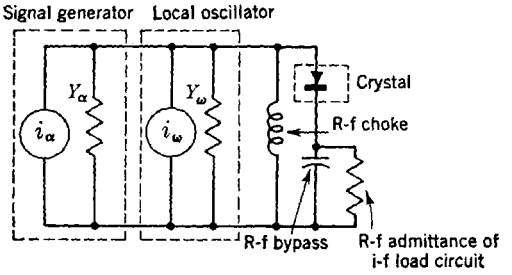

FIG. 3·2.—Simplified representation of r-f aspect of high-loss mixer.

admittance on one pair of terminals is negligible at the other pair. Thus, both the signal admittance and the i-f admittance are dependent only on the crystal unit and the amount of its local-oscillator drive. The r-f circuit and the i-f circuit may be considered separately as illustrated in Figs. 3·2 and 3·3, respectively. The i-f load circuit influences the r-f conditions only in so far as, in combination with the r-f bypass circuit, it develops an r-f voltage drop. Similarly, the r-f circuit influences the i-f admittance only in so far as, in combination with the i-f bypass circuit, it produces an i-f voltage drop and so detracts from the i-f voltage appearing at the output terminals.

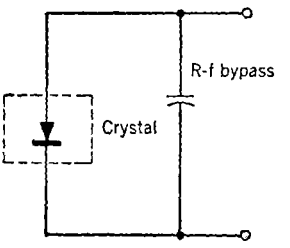

FIG. 3·3.—I-f circuit of high-loss mixer.

The best performance of a mixer of this kind, as a frequency converter, is obtained when the signal power is caused to develop the maximum possible voltage across the crystal unit. This condition is satisfied if the signal-generator admittance is made equal to the complex conjugate of the input admittance to the crystal mixer, and if no r-f signal power is dissipated in the admittance of the local oscillator or of the i-f load. To satisfy this last condition, the local-oscillator admittance must be zero and the admittance of the bypass circuit must be infinite. In practice, it is necessary only to make the local-oscillator admittance so small, and the admittance of the r-f bypass circuit so large, compared with the signal admittance of the crystal, that the amount of signal power that is dissipated in them is a negligible fraction of the available signal power. The

design of the r-f portion of a high-loss mixer, therefore, reduces to three parts which are:

1. Design of a signal-coupling mechanism to match all available signal power into the crystal unit.
2. Design of a local-oscillator-coupling mechanism that has negligible effect on the signal admittance.
3. Design of an r-f bypass circuit for the i-f output terminals that will not allow the r-f power to couple to the i-f load circuit.

Usually, the signal generator to which the mixer should be matched is the antenna of the receiving system. The antenna, in turn, is so made that its radiation admittance terminates a transmission line in its characteristic admittance. The desirable signal-input circuit, therefore, would be a transmission line of the same type, with the mixer so arranged that the crystal provides a matched load to this transmission line, whether it be a coaxial line or a waveguide. In addition, there must be terminals to supply local-oscillator power, across which only a negligible part of the available signal power appears, and there must be terminals for the i-f output voltage. Experimentally, the admittance of a high-loss crystal unit for the small signal in the presence of the local-oscillator drive, is found to be approximately the same as for a signal of the same magnitude as the local-oscillator signal in the absence of the local-oscillator drive. It is possible, therefore, to begin the task of mixer design by designing a crystal mount that contains only the crystal unit and the i-f output circuit without incorporating the LO coupling circuit. The mount is so adjusted that a signal at the local-oscillator level is matched into the crystal unit. Moderate corrections may be required, for low-loss crystals, to obtain minimum conversion loss from the crystal mount, when finally operated as a mixer. By such a procedure the task is made straightforward even if there is no previous information as to the input admittance of a particular crystal in the desired mount and frequency range.

3·2. The Design of a Crystal Mount.—The physical form of the mount for the crystals in ceramic cartridges is arbitrary. The only features that all such mounts have in common are contacting elements for both ends of the cartridge unit. The unit can be made to be a part of a coaxial line, or it can be mounted in a waveguide or in a resonator. Nothing in the basic mixer circuit requires or excludes frequency selectivity in the r-f circuit, except for the separation of i-f, d-c, and r-f voltages. Hence, any form of the mount will operate equally well at the frequencies for which the signal-input-line admittance matches the antenna-line admittance. Historically, resonant mixers were at first considered necessary, but only because admittance transformation was obtained through their use. The more recent designs of mixers use nonresonant

coaxial-line and waveguide mounts for the crystal. Any r-f preselection, or separation of signal- and image-frequency terminals, has been accomplished through the use of a resonant TR cavity or of a resonator added between the crystal mount and the input terminals.

The crystal is mounted in either waveguide or coaxial line, in such a way that it does not represent a large mismatch as a termination of the line when r-f power at the local-oscillator level is incident in the line. If, with an experimental crystal mount, a large mismatch is found, a measurement of the apparent admittance of the crystal allows a correcting change to be made. If the mismatch is not large, tuning elements, such as sliding-screw tuners, stub tuners, plungers, and sliding quarter-wavelength transformers, may be added to cause the crystal to match the line. An investigation of the admittance characteristics of a large number of representative crystals will show whether all units can, by means of the tuning elements, be made to match the line.

The tuning of most recently designed crystal mounts has been fixed. Fixed tuning is possible because the crystal units are made to pass the conversion-loss test in a mixer having fixed tuning. As a consequence, it should be expected that the crystal units should behave identically in the receiver mixer, provided its tuning is fixed at the same point as that of the test mixer. A crystal mount identical with the one used in the mixer of the crystal test set would be properly tuned only for the frequency of operation of the test set and with a circuit in which the image-frequency wave is not reflected to the mixer. If fixed tuning is desired at a single frequency of operation different from that of the test set, it may be achieved through fixing the tuning adjustments of the mixer on the basis of best results with a large number of representative crystals. On the other hand, if the mixer is required to operate over a wide band of frequencies, the same tuning may not be adequate, and tuning elements might be required for a mixer intended for use in a broad band if not for use at a single frequency.

If fixed tuning over as wide a frequency range as possible is desired, the crystal mount itself should come as close as possible to a matched termination of the input line. Any additional transformer is then required to give only a small transformation effect and it is, consequently, relatively insensitive to frequency. As a general rule, the larger the transformation effect of a simple microwave admittance transformer, the more sensitive to frequency it becomes. This effect is obvious for a transformer employing a quarter-wavelength section of transmission line. There is, of course, in addition to the frequency-sensitive character of the admittance-matching circuit, frequency dependence of the admittance of the crystal unit itself, although it is difficult to separate the two effects. It is often possible to combine a mismatched crystal and mount with a

matching circuit in such a way that the frequency sensitivity of the two tend to compensate each other. The match can then be held over a wider band than would be possible for a mount that was perfectly matched at the center frequency of the band. With a mount that is perfectly matched at a given frequency, it is often possible to add a resonant circuit that, at the resonant frequency, has a transformation effect of unity, and hence no effect, but that compensates for the frequency dependence of the crystal admittance at other frequencies.

It should be noted here that the only difference between a crystal mount designed for a mixer and one designed for a low-level detector is in the level of the input signal for which the admittance measurements are made. For a low-level detector, these measurements must be made at a signal level of 1 μw or less, and the resultant admittance of a particular mount is consequently different from that at the local-oscillator

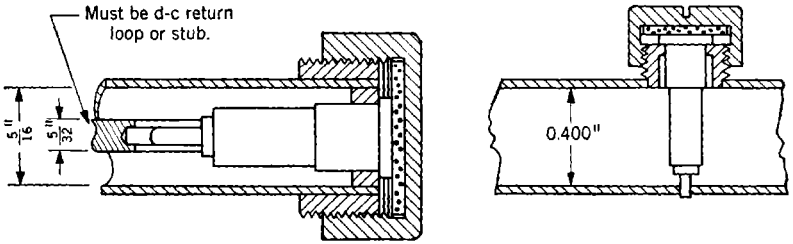

(*a*) Coaxial-line crystal mount for 10-cm band. (*b*) Crystal mount for 3-cm band.
FIG. 3·4.—Cartridge-crystal mount.

level of signal. The design of a low-level detector, however, is completed when a satisfactory mount has been achieved for the small signal level, because there is no need for a local-oscillator circuit, and the efficiency is so small that the load admittance does not affect the r-f match. A mount for use in a mixer must ultimately be checked as a mixer with the local-oscillator injection operating and with an appropriate i-f load admittance and d-c circuit as well as any preselecting resonant circuits in place, because all of these things have some effect on the resultant small-signal admittance. The preliminary admittance measurements with the single signal at local-oscillator level must be made with a low-resistance path for the rectified crystal current, in order to avoid the generation of a backward bias voltage across the crystal. That the level of power actually being dissipated in the crystal unit is about the same as the recommended local-oscillator level can be assured by use of a milliammeter in this d-c circuit. The incident power may be appropriately increased if the mount has a large reflection loss.

3·3. Crystal Mounts for the 3-cm and the 10-cm Bands—Two crystal mounts commonly used for crystals in ceramic cartridges are

illustrated in Fig. 3·4*a* and *b*. The first is a coaxial-line mount used in the range from 4000 to 2500 Mc/sec and the second is a waveguide mount, in rectangular waveguide 1 by ½ in. OD by 50-mil wall, used in the range from 9600 to 8500 Mc/sec. The diagrams are only symbolic of the r-f characteristics of the mount, for they show no provision for bringing

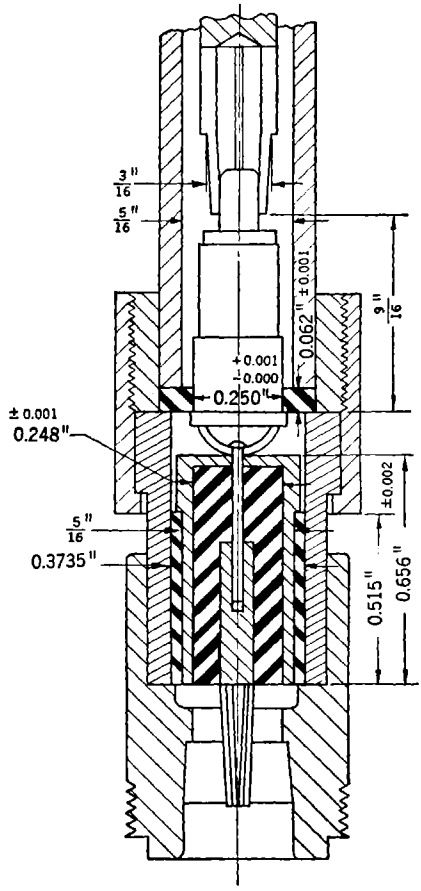

FIG. 3·5.—Coaxial-line crystal mount for 10-cm band.

out the low-frequency voltage or rectified current. The mounts in which this provision is included are shown in Figs. 3·5 and 3·6. In the coaxial-line mount it is necessary to have a path of low d-c resistance to and of low i-f impedance between the center and the outer conductors of the coaxial line, to correspond to the r-f choke of Fig. 3·1. Provision for this return path has not been shown because its nature is dependent

upon the rest of the mixer. In some mixers the return path is provided by a loop that excites the coaxial line. If there is no such loop, a quarter-wavelength side stub, which is also useful for supporting the center conductor, can provide this d-c return. The diameter and characteristic admittance of the coaxial line shown in Fig. 3·4*a* are such that the line fits over the cartridge unit conveniently, and connects without serious mismatch to the standard type-*N* coaxial-line fittings used for low-level cables. The crystal admittance resulting with a line of this size and no transformers is not greatly different, at 3000 Mc/sec, from the line

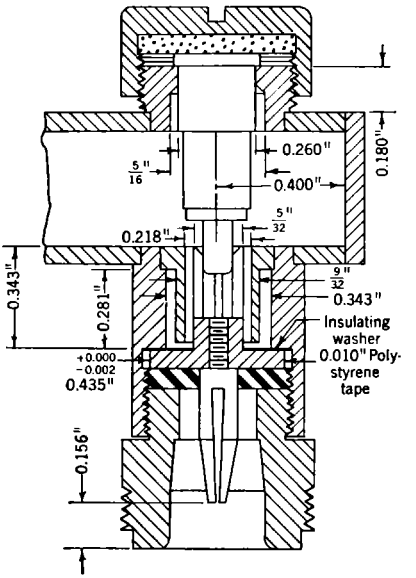

FIG. 3·6.—Waveguide crystal mount for 3-cm band.

admittance. If this had not been true, a line having some other characteristic admittance would have been preferable. There are several parameters in the mount for 9000 Mc/sec which can be chosen to make the average representative crystal unit terminate the line in its characteristic admittance. The position of the crystal unit, both relative to the center of the broad dimension of the waveguide, and axially along the narrow dimension, may be adjusted to control the resultant admittance. The distance along the waveguide from the axis of the crystal cartridge to the short circuit at the back end of the unit is also such a parameter. None of these parameters afford strictly independent adjustment of the resultant admittance. It is found, however, that if the admittance determined from the measurement of the standing-wave ratio in the

waveguide leading to the crystal is referred to the plane of the axis of the crystal cartridge, the adjustment of the length of waveguide beyond the crystal unit results essentially in variation of the susceptance component of the crystal admittance. At a length about equal to one half of the wavelength in the waveguide, the crystal unit is completely short-circuited by the reflected short circuit at the end of the waveguide and the reflection coefficient of the mount is unity. The crystal current becomes zero for this length, since no voltage is built up across the crystal barrier.

It is not advisable to achieve a match with the waveguide crystal mount by using a length, between the short circuit and the crystal, near to a half wavelength, since the susceptance introduced by the back part of the waveguide is then large. The susceptance varies very rapidly with frequency and the crystal mount is correspondingly sensitive to frequency. The adjustment of the length of waveguide beyond the crystal is the design parameter most easily determined, because a sliding short-circuiting plunger in the waveguide can be used. If the susceptance component of the crystal admittance can be tuned out only with a length nearly equal to the length for which the crystal is short-circuited, it is preferable to change the mount in some way to allow the use of a length more nearly equal to one-quarter wavelength in the waveguide. It has been found that a change of the position of the crystal along the line through its axis also causes a change primarily in the susceptance component of the crystal admittance. The position may be so chosen that the crystal mount has only a small susceptance with a short circuit a quarter-wavelength beyond the crystal. The effect of moving the crystal cartridge across the waveguide in the plane perpendicular to the waveguide axis is primarily to vary the conductance component of the admittance. This variation occurs because the voltage (integrated field intensity) between the top and bottom of the waveguide is a sinusoidal function of the crosswise position, with a maximum at the center and zeros at each side. Correspondingly, the presence of the crystal unit has the greatest effect on the electric field when the crystal is at the center, and has less influence when the crystal is moved toward the side of the waveguide. The conductance of the crystal mount thus falls from a maximum value with the crystal at the center to a minimum with the crystal at either side.

In this way it has been found possible to make a crystal mount for the 9000-Mc/sec frequency region which has an admittance, with a crystal representing an average with respect to the admittance scatter of all units, equal to the characteristic admittance of the waveguide at the level of signal equal to the optimum local-oscillator drive. The crystal units used in this region are the 1N23, 1N23A, and 1N23B types, all of

which show approximately the same spread of admittance since they are tested, in production, in identical mixers.

It is more difficult to make the desired adjustments of admittance in the coaxial-line mount than in the waveguide mount. Although the wavelengths for which the coaxial-line mount is used are longer compared with the dimensions of the crystal, the crystal cannot be treated as a lumped-circuit element because it appears as part of the center conductor of the coaxial line. It is largely fortuitous that a coaxial line of a convenient size and characteristic admittance can be used as a crystal mount in the 3000-Mc/sec region, since the early crystal mixers used for production testing were not at all similar to the present mount. An r-f impedance of 40 to 50 ohms in the coaxial-line mount must be derived from the effect of the barrier capacitance and from the transforming effects of the various parts of the cartridge. At a frequency as low as the intermediate frequency, the crystal unit would exhibit an impedance to a small signal of the same order as the i-f output impedance. The i-f output impedance is usually several hundred ohms, and a crystal having an r-f impedance this high would be difficult to match to a 50-ohm line. At 9000 Mc/sec, the aspect of the crystal in the waveguide mount is such that it can be considered approximately as a lumped admittance connected across the waveguide.

3·4. The Filter in the I-f Output Lead.—The r-f bypass at the low-frequency (i-f, video-, or audio-frequency or direct-current) output terminals is, in neither of the mounts under discussion, completely accomplished through the use of a simple lumped capacitance, as would be inferred from the basic equivalent circuit. The function of this circuit may be considered as twofold: (1) it provides a path of high r-f admittance, compared with that of the crystal, with the result that the loading of the transmission line is the same as if the crystal were short-circuited to the line at this point; (2) it prevents leakage of any appreciable amount of r-f power—primarily local-oscillator power, since its level is so much higher than that of the signal—into the input circuit of the i-f amplifier. The requirements set on the effectiveness of the filter circuit by the first of these functions might at first appear to be much smaller than those of the second. Since the r-f admittance of the input circuit of the i-f amplifier to which the mixer is to be connected is arbitrary, the effectiveness of the filter circuit could be reduced considerably if a resonance were to occur when the two were connected together. Consequently, to avoid such effects, a large capacitance or a more complex filter is required. It is felt that the circuit of the filter type is more effective, per unit of capacitance introduced at the i-f terminals, than the lumped capacitance, in a restricted band of radio frequencies. Since most applications of microwave mixers have been in receivers

having wide i-f pass bands, the i-f capacitance of the mixer is important in determining the maximum pass band of the input circuit of the amplifier. The lower this capacitance, the wider the input circuit can be made.

The operation of the filter is similar to that of many filters used as joints for r-f lines. In the filter used with the 3000-Mc/sec crystal mount, a spring-metal contact is used to make connection to the large end of the crystal cartridge. The spring contact is mounted by a rivet on the base of a cylindrical metal cup that has an open end toward the i-f outlet. The center conductor of the i-f line extends into this cup and terminates at the solid end of it. The inside of the cup, which is filled with a polystyrene dielectric, is thus a concentric line short-circuited at one end and a quarter wavelength long, in the dielectric. The open end, therefore, has a vanishingly small admittance. A wave progressing along the coaxial line formed by the outside conductor and the outer part of this cup induces currents in the outer wall of the cup, and, in order for the wave to travel out the i-f line beyond the open end of the cup, the current of the inner conductor must pass through the small admittance of the cup. Thus, unless the r-f admittance of the i-f output line seen at the open end of the cup is also very small, the major part of the voltage drop at this point appears across the end of the cup or choke. The r-f current in the i-f output line is kept small, because of the small admittance of the choke and, therefore, the r-f power getting into the i-f circuit is kept small. In order that the choke system be equivalent to an r-f bypass at the base of the crystal, the length of the coaxial line formed by the outer conductor and the outside surface of the cup or choke is made equivalent to a quarter wavelength. Because this line is terminated in an admittance at least as small as the admittance of the choke, a large r-f admittance results between the base of the crystal and the outer conductor of the crystal mount.

In the waveguide crystal mount used at 9000 Mc/sec, the r-f filter on the i-f output lead operates in much the same way, except that the addition of a small lumped capacitance just beyond the quarter-wavelength choke gives further assurance that the r-f admittance of the i-f output line is large at this point. The choke occurs, for mechanical reasons, in the outer conductor of the coaxial i-f output line. The point at which the choke appears in series with the output line, however, is a quarter wavelength along the line from the point at which the large bypass admittance is desired, in this case between the pin end of the crystal cartridge and the bottom wall of the waveguide. The reasons governing the choice of a circuit containing both a distributed-parameter filter and a lumped capacitance are largely mechanical, since the center conductor of the output line must be supported. The capacitance of the lumped condenser is not large compared with the distributed capaci-

tance of the output lead. The total i-f capacitance, consequently, could not be reduced greatly by elimination of the condenser, and its inclusion makes the tolerances on the dimensions of the choke filter less rigid. The filter action is also less frequency-sensitive than it would be without the condenser.

A choke joint or a filter of this kind is most effective over a wide frequency range if the characteristic impedance of the coaxial line forming the choke is as high as possible, and if that of the line forming the quarter-wavelength transformer is as low as possible. At the frequency for which the effective lengths of the choke and of the transformer are exactly one-quarter wavelength the filter is perfect, since the impedance at the open end of the choke is infinite. The impedance between the crystal and the outer conductor of the crystal mount is therefore zero, if dissipation in the filter itself is neglected. At a frequency differing from this by a small amount, however, the impedance at the open end of the choke is a large reactance. The larger this reactance is, compared with the characteristic impedance of the transformer section and compared with the r-f impedance of the i-f line, the smaller are the leakage of r-f power into the i-f circuit and the impedance between the end of the crystal and the outer conductor of the crystal mount. The reactance of the choke is proportional to the characteristic impedance of the line forming the choke.

In the coaxial-line mount, therefore, the ratio of the diameters of the outer and inner conductors of the line forming the choke is made relatively large and the ratio of the diameters of the outer and inner conductors of the line forming the quarter-wavelength transformer is made small. The maximum usable line size for the 9000-Mc/sec crystal mount is one in which the mean circumference of the inner and outer conductors is nearly 3 cm, for other modes than the principal mode may be propagated in a larger line. The characteristic impedance of the choke, therefore, cannot be made very high and, consequently, the addition of the condenser across the i-f line helps to reduce the leakage of r-f power in a wide band of frequencies.

The only effect of the filter on the i-f characteristics of the crystal mount is to produce a capacitance, provided the section is short compared with a quarter wavelength at the intermediate frequency. Since this is true, the i-f capacitance is just the static capacitance between the inner and outer conductors of the output line. In the coaxial crystal mount the capacitance is contributed primarily by the quarter-wavelength section of the cup and increases with decreasing characteristic impedance of this transformer. The desire for a small i-f capacitance in the mixer sets the limit on the diameter ratio of this section of line, and the bandwidth of the choke is therefore restricted. Each of the crystal

mounts illustrated has an i-f capacitance of about 11 $\mu\mu$f. The effectiveness of the chokes in eliminating leakage power can be measured by inserting the crystal mount, with a crystal in place, between a signal generator at the local-oscillator level and an output indicator such as a spectrum analyzer. By comparison of the leakage power with the power available directly from the signal generator, the insertion loss of the crystal and filter is found, and if it is also known that the crystal mount approximately matches the signal-generator impedance, it may be concluded that the incident power is almost completely delivered to the crystal, if the insertion loss is large. Just how large this insertion loss must be is difficult to determine, but with the mounts described it is greater than 30 db in the frequency bands for which they are intended and with a matched coaxial-line r-f load at the i-f output connectors. Two cups differing in length but otherwise identical have been used in filters in the coaxial-line mount. One of these cups has an outside length of $\frac{5}{8}$ in. and gives maximum insertion loss at a wavelength of about 10.7 cm. The other has a length of $\frac{1}{2}$ in. and gives a maximum effect at about 8.8 cm. The longer cup is used between 9.5 and 12 cm and the shorter one between 7.5 and 9.5 cm. A curve typical of the ratio of the power incident on the crystal to that leaking into an r-f load matching the line admittance on the i-f output connector is shown in Fig. 3·7. The ordinate is the power ratio in decibels and the abscissa is the wavelength expressed in units of the resonant wavelength of the choke.

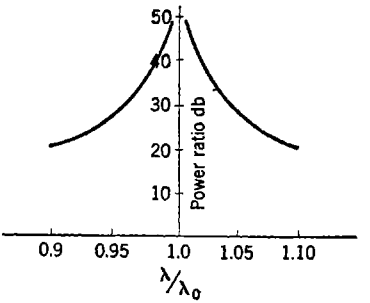

FIG. 3·7.—R-f leakage of choke vs. wavelength.

3·5. Tunable Crystal Mounts.—A technique commonly used in the 9000-Mc/sec band to make the crystal mount tunable, after it has been designed to give an approximate match, is illustrated in Fig. 3·8. The position of the short circuit behind the crystal is made adjustable through the use of a plunger of the choke type and, thus, the effective susceptance of the crystal is controlled. Two tuning screws, one situated three eighths of a wavelength and the other five eighths of a wavelength ahead of the center line of the crystal are provided. These screws allow adjustment primarily of the conductance component of the admittance referred to the center line of the crystal. The admittance of the crystal itself is, of course, not changed by the insertion of the screw but the admittance at a point an integral number of half wavelengths toward the generator from the center line of the crystal is changed, primarily in the conductance

component, for a small insertion. That this is true can be seen with the aid of an admittance diagram, with the knowledge that the effect of the tuning screw is to add a capacitive susceptance in shunt at the center line of the screw. Thus, if the crystal were matched to the waveguide, a small insertion of the screw three eighths of a wavelength from the crystal would make the crystal appear to have a conductance larger than unity. A small insertion of the other screw would decrease the apparent crystal conductance. Only one screw is used at a time, the choice of screw depending upon whether the apparent conductance must be increased or decreased. The adjustments of the screw and of the plunger

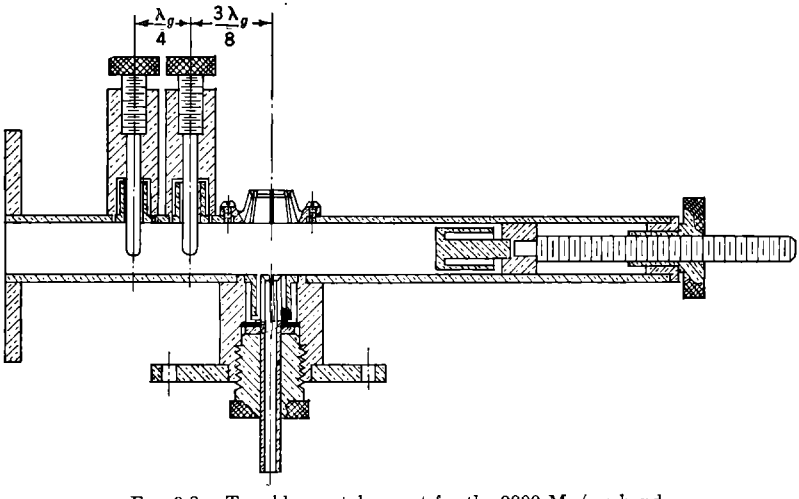

FIG. 3·8.—Tunable crystal mount for the 9000-Mc/sec band.

are completely independent only for very small insertions of either screw. A large range of tuning is available from the adjustment of the plunger and one screw. If, however, the crystal is severely mismatched to the waveguide with no insertion of the screw and with the plunger set a quarter wavelength from the crystal, some dissipative loss may result in the tuning screw and in the plunger when they are used to match the crystal mount to the waveguide. In addition, the frequency sensitivity of the resulting admittance is large. Both the plunger and the tuning screws have choke systems similar to that of the i-f output lead, to prevent leakage and to decrease contact losses. Only a small current flows at the points where metal-to-metal contact occurs and the design considerations of these choke systems are similar to those of the filter. The best operation over a wide band is obtained for a high characteristic impedance in the line forming the choke and a low characteristic impedance in the quarter-wavelength transformer section. Attempts have been

made to design plungers and screws that actually make contact and thus have not the constructional complication of the chokes, but no designs have been found which are as satisfactory under service conditions as those using chokes. This is particularly true of the tuning screws, if smooth continuous operation is desired. For experimental purposes, an ordinary screw can be put into a threaded hole in the top wall of the waveguide and locked by forcing a nut on the screw above the waveguide against the top wall. This simple screw, however, cannot be adjusted continuously because it depends for contact on the clamping effect of the nut.

The only tunable crystal mounts of the coaxial-line variety that have been built have used standard coaxial-line tuning elements. One of these mounts contained, in the line ahead of the crystal, a pair of polystyrene cylinders filling the space between the inner and outer conductors of the coaxial line. The length of each of the cylinders was one quarter of the wavelength in the dielectric. The cylinders could be slid together along the line, and the spacing between them could be varied from zero to one-half wavelength. This device constitutes what has been called a "double slug" tuner. Since the characteristic admittance of the section of line in which one of these dielectric cylinders appears is $\sqrt{k_e}$ times the normal line admittance, where k_e is the dielectric constant of the cylinder material, it is apparent from an admittance chart that the maximum transformation effect occurs for a spacing between the cylinders of one-quarter wavelength. An admittance corresponding to a voltage standing-wave ratio equal to k_e^2 can be made to match the line. With the cylinders together or one-half wavelength apart, there is no transformation effect because a half-wavelength section of transmission line is a one-to-one transformer. Therefore, any transformation from unity to k_e^2 can be achieved. The phase angle can be controlled by the position of the pair relative to the crystal mount and, in this way, any voltage standing-wave ratio less than k_e^2 can be matched out.

Under special conditions, tuners having tuning ranges smaller than this have been used. This is true, for instance, for some crystal mounts for low-level detectors, where the same basic mount was used but where measurements of the admittance of the mount with large numbers of representative crystals showed that it was possible to bring all of the crystals sufficiently close to a match over the required 10 per cent band of frequencies with a single sliding metallic slug. Such devices can be designed only by measurement of the admittances to be matched to the line. Thus, if the required tuning range is known, a satisfactory tuning device can be found.

One frequent source of trouble in crystal mounts that have had several changes of crystals is in the contact to the pin end of the crystal

cartridge. Experience has shown that contacting fingers such as those shown in Fig. 3·5 have been the most satisfactory ones tried, especially when made of tempered beryllium copper. Similar contacting fingers have consequently been used in all mounts used for crystals in ceramic cartridges, in both the 3-cm and the 10-cm regions. Saw cuts 0.020 in. by 0.375 in. were found to give a good compromise between large contact pressure and ability to withstand reasonable deflections without becoming bent through distortion beyond the elastic limit. Although the specifications of the crystal cartridge call for a rounded end on the pin, it has been found well worth while to include an internal bevel in the end of the contacting fingers to assist in the centering of the pin during insertion of a crystal in the mount.

3·6. Admittance Scatter in a Mount of Fixed Tuning.—Because of the desire to make crystal mixers that are fixed in tuning, a large part of the design of the crystal mount is concerned with finding the best fixed adjustment for all crystal units that are expected to be used. This can be done by measurement of the admittances of very large numbers of crystal units representative of those which will be used in the mount, and by adjustment of the mount in such a way that the scatter of admittances, when plotted on a Smith admittance chart, covers an area centered at the characteristic admittance of the input line. In order to reduce the labor involved in making these measurements, a special procedure of crystal selection has been used.

To ensure that the crystals to be used in the tests were representative of those to be encountered in service, crystals were chosen at random from stocks of the various types made by each of the several manufacturers. A total of one or two hundred crystals was used and the r-f admittance of each was measured in a crystal mount that was found to be reasonably well matched for a few randomly chosen crystals. Then these admittances were plotted as points on an admittance chart and from this the area and, therefore, the proper tuning of the mount could be determined. Once this had been done it was not considered necessary to use the large number of crystals in further work for this frequency band, since the entire admittance region could be represented by a few crystals having admittances on the boundary of the region and by one or two having admittances in the center of the region. It was found that 10 per cent changes in frequency or small changes in the mount affected the admittances of all the crystal units in about the same way. Their positions on the margins or in the center of the admittance spread were consequently preserved, even though the whole region was transformed to another part of the admittance chart. These representative crystals were preserved for use in tests of many kinds and such tests could then be regarded as showing the results to be obtained with crystals of almost any

characteristics to be encountered among production units. Since the crystal units of one type number but different suffixed letters (1N21, 1N21A, 1N21B) were usually used interchangeably, the original selection included samples of all such types. There was, usually, less difference found among the different types than among crystals of the same types but from different manufacturers. Almost all of the design considerations of the fixed-tuned mixer are dependent upon this admittance

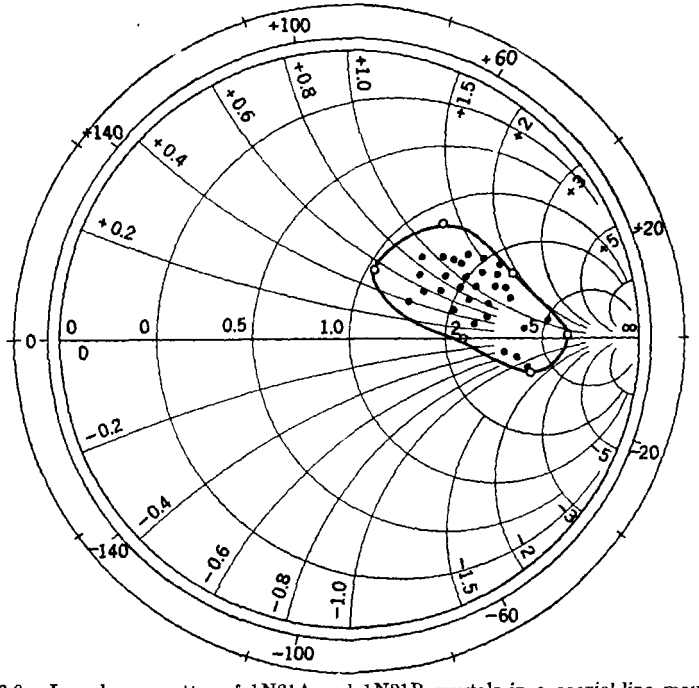

FIG. 3·9.—Impedance scatter of 1N21A and 1N21B crystals in a coaxial-line mount at 8.5 cm.

spread. The borderline crystals, therefore, were used in many tests besides the admittance measurement of the mixer.

In Fig. 3·9 a typical spread of impedances for a coaxial-line 8.5-cm mount is shown with the borderline crystals selected as representative marked with circles. An admittance scatter at 3.3 cm in a mount resembling the standard one of Fig. 3·6 is shown in Fig. 3.10. The outlines of the spread at 3.13 cm and at 3.53 cm are also shown, with the positions for the representative crystals at these wavelengths indicated by the circles on these contours. It will be observed that the admittance change occurs almost entirely in the susceptance component and is in the direction which would be found if the crystal unit were

representable as a shunt-resonant circuit connected across the waveguide at the position of the centerline of the crystal unit.

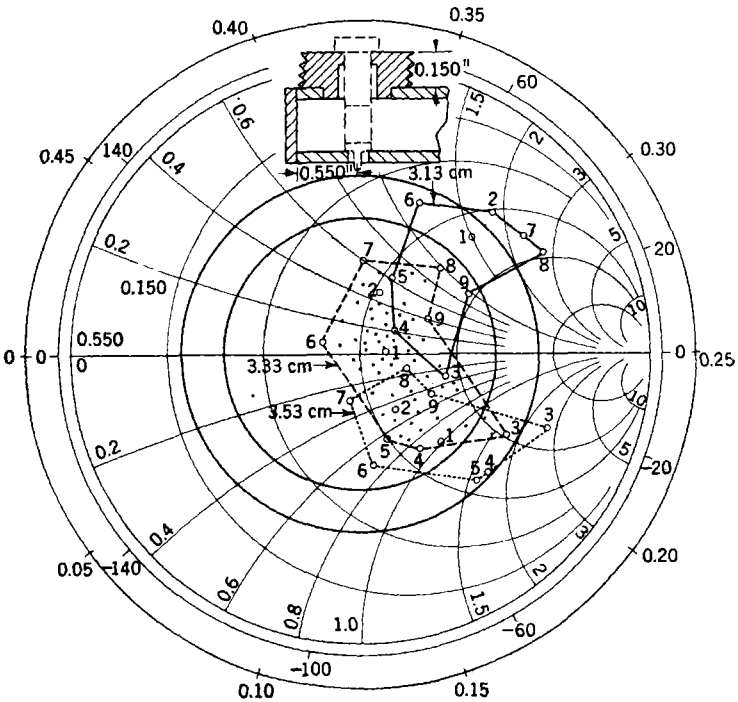

FIG. 3·10.—Admittance scatter of 1N23, 1N23A, and 1N23B crystals at 3.13, 3.33, and 3.53 cm.

3·7. Local-oscillator Coupling Mechanisms.—As discussed in Sec. 3·1, the prime requirement of the method of coupling the local-oscillator signal to the crystal is that it does not cause a significant loss of received signal power. In the equivalent mixer circuit of Fig. 3·1 this was shown to require that the shunt admittance of the local-oscillator circuit measured in the mixer be small compared with the signal-generator and crystal admittances. For this to be possible the power available from the local oscillator must be much larger than that which is actually transmitted to the crystal, because a large mismatch exists between the local oscillator and the mixer circuit. In Fig. 3·11, an equivalent circuit illustrating this situation is given. The signal-generator admittance g_s has been assumed

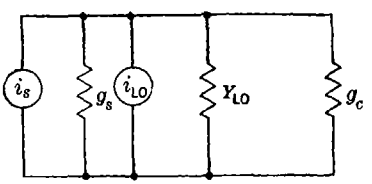

FIG. 3·11.—Simplified equivalent circuit of a mixer.

to be pure real and the crystal admittance g_c has also been assumed to be pure real. If the local-oscillator admittance were zero, maximum power would be delivered to the crystal if g_s were equal to g_c. The simplest case to analyze is the one in which these admittances are the same at the signal and local-oscillator frequencies, and the mixer may therefore be considered to have a low Q. It is easily shown that the fraction of the signal-generator power that is delivered to the crystal when the local-oscillator coupling is added is

$$T_{sc} = 4g_sg_c/[(g_s + g_c + g_l)^2 + b_l^2], \tag{1}$$

where g_l and b_l are the real and imaginary parts of the admittance of the local-oscillator circuit as measured at a point in the mixer line. Correspondingly, the fraction of the available local-oscillator power which is delivered to the crystal is

$$T_{lc} = 4g_lg_c/[(g_s + g_c + g_l)^2 + b_l^2]. \tag{2}$$

The fraction of the signal which is lost through the introduction of the local-oscillator circuit is

$$T_{sl} = \frac{4g_sg_c}{(g_s + g_c)^2} - T_{sc}, \tag{3}$$

which is

$$T_{sl} = \frac{4g_sg_c(2_{gs}g_l + 2g_cg_l + g_l^2 + b_l^2)}{(g_s + g_c)^2[(g_s + g_c + g_l)^2 + b_l^2]}. \tag{4}$$

Under the condition that $g_s = g_c$ this is

$$T_{sl} = \frac{4g_sg_l + g_l^2 + b_l^2}{(g_s + g_c + g_l)^2 + b_l^2}. \tag{5}$$

If the admittance of the local-oscillator circuit is small compared with g_s, the last two terms in the numerator may be neglected and the equation then is identical with Eq. (2). This means that, for small local-oscillator coupling, the fraction of signal power which is lost because of the presence of the local-oscillator circuit is approximately equal to the fraction of the available local-oscillator power which is delivered to the crystal. If, therefore, it is desired that not more than 5 per cent of the signal power be lost because of the local-oscillator circuit, 20 times the required local-oscillator drive for the crystal must be available from the local-oscillator circuit in the mixer. Since the local oscillator is often coupled through a circuit that has loss, for reasons that will be discussed in a later section, the local oscillator must be capable of delivering more power than this, and the design of the LO coupling circuit is not so simple as it might appear. Even if the local oscillator can deliver 100 times as much power as is required to drive the crystal, precautions against deterioration in

mixer noise figure caused by interaction between the signal circuit and the local-oscillator circuit must be taken.

An additional complication to the problem of the design of an LO coupling circuit is that the output power available from different oscillator tubes of the same type can differ by large factors. Usually, the tube specifications set a lower limit to this output power but many tubes can be found which give two or three times as much power as this minimum. When this variation is added to the variation encountered as the tube is tuned through a wide band and to the variation in the amount of coupling with crystal admittance, the total variation of local-oscillator power delivered to the crystal under all conditions of operation is more than can be tolerated if the mixer is to operate within a few tenths of a decibel of optimum noise figure. It has therefore been considered necessary to have an adjustable local-oscillator coupling in order that the optimum local-oscillator power at the mixer crystal may always be obtained. In so-called fixed-tuned mixers this adjustment is retained and is the only adjustment required for operation with any crystal of the proper type and with any local-oscillator tube in the specified band of frequencies. If the amount of local-oscillator power delivered to the crystal is varied by adjustment of the coupling circuit, the values of g_l and b_l in Eqs. (2) and (5) vary. Equation (5) applies if the tuning of the crystal mount is optimum in the absence of the LO coupling circuit. For a fixed amount of coupling, the tuning of the crystal mount could be such that the susceptance component of the admittance of the local oscillator was canceled by a susceptance of equal magnitude and opposite sign in the crystal admittance. The conductance of the crystal mount could be made equal to $g_s + g_l$ to obtain maximum signal power in the presence of the LO coupling circuit. If this were done the percentage of the available local-oscillator power delivered to the crystal would be exactly equal to the percentage of available signal power lost because of the presence of the local-oscillator circuit. A practical LO coupling circuit must be adjustable and the correction in the tuning of the crystal mount cannot be made. The signal loss is therefore increased because of reflection.

The simplest LO coupling circuits are inefficient because the added susceptance b_l is large compared with the conductance g_l. Because of this, the signal power lost by reflection is larger at a given effective coupling than it would be if the admittance of the local oscillator were kept real at all adjustments.

Most of the mixer circuits that have been designed for radar service have been operated with a TR cavity preceding the mixer in the signal line. The most commonly used TR cavities are highly resonant, and the circuit representing the local-oscillator coupling is not the same as that for the signal. Many TR cavities have sufficiently high Q's to be treated as

completely reflecting circuits at the local-oscillator frequency, when resonant at the signal frequency. If such a TR cavity is used the local-oscillator injection can be made at a point in the mixer line, between the TR cavity and the crystal, where the admittance of the line terminated by the cavity is almost zero. In a waveguide, for instance, the TR cavity appears as though it were a short circuit, at frequencies sufficiently removed from resonance and, therefore, the admittance of the line terminated by the TR cavity is very small at a point a quarter of a waveguide wavelength toward the crystal. If the local-oscillator signal is injected at such a point, as a signal from a generator having a small admittance, the fraction of the available local-oscillator power delivered to the crystal is

$$T_{lc} = \frac{4g_l g_c}{(g_c + g_l)^2 + b_l^2} \tag{6}$$

Therefore, the effective coupling is greater by a factor of about four than the coupling obtained without the TR cavity for the same g_l and b_l, if g_s is equal to g_c and if g_l and b_l are small compared with g_s. This can be explained in another way by supposing the local oscillator to excite a wave that travels in both directions from the injection point in the mixer line. Without the TR cavity the wave that travels toward the signal-input end of the mixer is lost, but with the TR cavity present, it is reflected. The choice of the injection point at a quarter of a wavelength from the position of the short circuit that is equivalent to the TR cavity at the local-oscillator frequency corresponds to a position such that the wave reflected by the TR cavity has the same phase as that traveling toward the crystal. Hence the total amplitude of the wave traveling toward the crystal is twice as great as it would be without the TR cavity. Therefore, four times as much local-oscillator power arrives at the crystal.

Besides giving greater local-oscillator coupling for a given amount of interaction of the local-oscillator circuit and the signal circuit, the addition of the TR cavity causes another change in the operation of the mixer circuit. For a small coupling without the TR cavity, the power delivered to the crystal by the local-oscillator circuit is a stationary function of the crystal admittance when the crystal is matched to the signal generator. Only the ordinary reflection losses are involved when the crystal admittance is different from this value, because the reflected local-oscillator wave is almost entirely dissipated in the signal-generator admittance. When the TR cavity is used, however, the local-oscillator power delivered to the crystal becomes very strongly dependent on the crystal admittance. If g_l is small compared with g_c, the power delivered by the local oscillator to the crystal is proportional to $1/g_c$. This requires that the available range of adjustment of the local-oscillator coupling be much greater than

without the TR cavity, to allow the optimum local-oscillator power to be delivered to crystals of all admittances occurring in the representative scatter. Two crystals having conductances differing by a factor of four would require adjustment of the local-oscillator coupling by almost this factor for the same power delivered to the crystal. It is, therefore, even less satisfactory to use a fixed LO coupling adjustment in a mixer having a resonant TR cavity in the signal line than in one having a completely nonselective circuit. Thus, although in the crystal test sets a fixed LO coupling adjustment is used with a single oscillator tube at a single frequency of operation, it is impractical to attempt fixed adjustment in a mixer for use with a TR cavity.

3·8. Capacitive Local-oscillator Coupling in Coaxial-line Mixers.—At 10 cm, where the small coaxial-line crystal mount is used, the common LO coupling circuit is a small capacitive probe, terminating a coaxial line that is coupled to the local oscillator and projecting into the main coaxial line of the crystal mount. One form of such a coupling mechanism is shown in Fig. 3·12. This device allows adjustment of the probe insertion without movement of the local-oscillator line, which is a convenience when frequent adjustments must be made. It is simpler to construct a coupling probe that is adjusted by sliding or screwing the whole coaxial line of the local-oscillator circuit in a sleeve mounted on the mixer line. An adjustment of this type has been used in mixers such as those used for crystal testing. In the mixer for testing, however, the level of the local-oscillator signal is changed only if the local oscillator is changed; otherwise the coupling adjustment is locked. It is important that good electrical contact be made through the screw threads or in the sliding section; therefore, a clamping arrangement or a lock nut is usually provided. In a circuit like that shown in Fig. 3·12, the center conductor of the side arm ending in the probe makes a sliding contact with the center conductor of the LO input line, and the spring used for this contact has been somewhat troublesome. The spring, which has slotted "fingers" at each end to contact the rod sliding in it, must be carefully soldered so that the temper is not lost. Beryllium copper is a very satisfactory material for a spring of this sort because it can be hardened after the soldering is done. The length of the stub line supporting the center

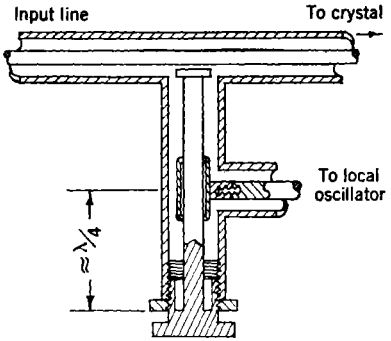

FIG. 3·12.—Adjustable local-oscillator coupler for a coaxial-line mixer.

conductor changes with adjustment of the probe insertion, but, since the probe represents a severe mismatch at the end of the line, the small reflection due to this stub is not serious.

In order that the local-oscillator tube will oscillate with this probe as its load, it is necessary to arrange that the actual load admittance presented to the oscillator is compatible with the characteristics of the oscillator. One way in which this can be assured is to use such a length of line, between the oscillator and the probe, that the admittance presented to the oscillator at the other end of the line lightly loads the oscillator. If this is done and if the system is to be continuously tunable, the line must be so short that the phase length of the line does not change appreciably in the required tuning range. If the equivalent electrical length of the line does change by a quarter wavelength, the loading will be very heavy and the oscillator may not operate satisfactorily. Another way of avoiding load admittances which upset the operation of the oscillator tube is to use lossy cable to couple the oscillator to the mixer circuit, to attenuate the wave reflected from the probe. Thus, the range of admittances that are presented to the tube as the phase length of the line changes with frequency is reduced and can be made small enough for the tube to operate satisfactorily. In view of the difficulty in getting sufficient local-oscillator drive without suffering from signal loss, however, this can be done only if a large excess of power is available from the tube. For operation with a 2K28 tube and with a nonresonant mixer circuit, 6 db of attenuation can be used but there is very little extra coupling available, with the most powerful tubes, before interaction and signal loss become serious.

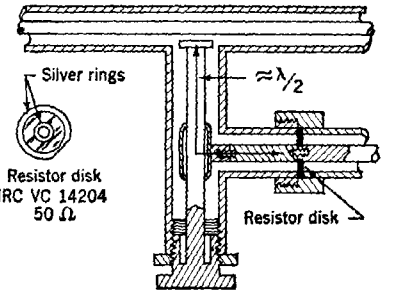

FIG. 3·13.—Local-oscillator coupler with resistor-disk termination.

A third way in which the load admittance of the local oscillator can be maintained at a reasonable value over a wide frequency range and with a long coupling line is illustrated in Fig. 3·13. Here a "resistor disk" which is a disk of Bakelite, coated with a carbon resistance material, and having silvered inside and outside rings for contacts, is put into the line. The resistance between the contact rings of this disk is the characteristic impedance of the coaxial line, 50 ohms in the local-oscillator circuit. The disk would be a reflectionless termination for the line if its r-f characteristics were such that it loaded the line with a resistance alone and if the admittance of the remainder of the line beyond the disk were zero. In practice there is a capacitive susceptance due to the large dielectric con-

stant of the Bakelite base of the resistor disk, as well as the conductance, in shunt with line in the plane of the disk. The line may still be terminated by the disk, however, if it is placed in a position where the admittance of the line beyond it contains an inductive susceptance of the same magnitude as the capacitive susceptance of the disk. Thus, the susceptance is resonated out and the load terminating the local-oscillator line has the conductance of the disk plus a small conductance caused by the small power transfer from the probe to the crystal-mixer line. The small capacitive susceptance of the probe and of the disk makes the resonant line length between the probe and the disk somewhat less than a half wavelength. A resistor disk has been provided in all coaxial-line mixers of recent design to secure a reasonable load admittance for the local oscillator. This circuit is less wasteful of local-oscillator power than that using attenuating cable. The local-oscillator power available at the mixer is reduced by a factor of approximately 2 (it cannot be specified exactly because the oscillator is not a linear generator) but the line may be made very nearly matched. In the design of Fig. 3·13, the admittance of the line between the probe and the disk varies as the probe is adjusted. Consequently, the termination is also varied but the voltage standing-wave ratio is less than about two for all adjustments and over a plus or minus 10 per cent band in the region of 10 cm. Since the half-wavelength section of line beyond the disk is frequency-dependent, the bandwidth is correspondingly restricted. The useful bandwidth is determined by the excursion in admittance that can be tolerated by the oscillator tube. At 10 cm, where the capacitive susceptances of the probe and the disk are small, the admittance of the termination is given approximately by

$$Y_T \approx Y_0\left(1 + j \tan \frac{\pi\lambda_0}{\lambda}\right).$$

For small deviations from λ_0, the resonant wavelength, the admittance is

$$Y_T \approx Y_0\left[1 + j\pi\left(\frac{\lambda_0}{\lambda} - 1\right)\right].$$

From this the wavelengths on each side of λ_0 for which a given reflection coefficient would be encountered can be calculated to estimate the usable bandwidth. For a voltage standing-wave ratio of 1.5, a reflection coefficient of absolute value 0.2 is required and the wavelengths for which this standing-wave ratio would be encountered are approximately $\lambda_0 \pm 0.12\lambda_0$; hence, a bandwidth of plus or minus 12 per cent is possible with that tolerance in the standing-wave ratio.

3.9. A Local-oscillator Coupling Circuit for Coaxial-line Mixers.—A very useful LO coupling circuit for coaxial-line mixers in which rigid

connections between the local oscillator and the mixer can be used is illustrated in Fig. 3·14. This circuit has some very great advantages over the capacitive-probe coupling circuit, especially if the LO output power is low. A direct connection is made between the mixer line and a coaxial line terminating in the pickup loop of the local oscillator. This line includes a movable section, with spring contacts in both the inner and outer conductors, so that the orientation of the loop with respect to the mixer can be adjusted and then clamped. For decoupling of the signal from the local oscillator, the resonant nature of the local-oscillator cavity is utilized. Because the local oscillator is tuned to a frequency differing from the signal frequency by the intermediate frequency, the local-oscillator cavity is not resonant at the signal frequency. A signal wave traveling down the local-oscillator line is therefore almost completely reflected at the loop. So far as the signal frequency is concerned, the local-oscillator line is just a stub, and if it is made the right length it has practically no effect on the signal-frequency wave. The line is approximately of nonreflecting length if the distance from the inside wall of the outer conductor of the mixer line to the end of the loop, including the perimeter of the loop, is an odd number of free-space quarter wavelengths. A single quarter wavelength would allow a reflection in the mixer line producing a voltage standing-wave ratio of less than 1.2 over a band of plus or minus 10 per cent.

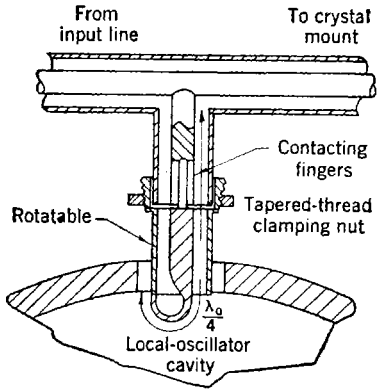

FIG. 3·14.—Adjustable local-oscillator coupling circuit in which the resonance of the LO cavity is utilized for decoupling the LO circuit from the signal.

The load presented to the local-oscillator line is nearly matched in this circuit. If power enters the mixer through a resonant cavity or a TR cavity, the reflection of power at the local-oscillator frequency by this cavity must reinforce the local-oscillator wave traveling toward the crystal, just as it does in the capacitive-probe coupling circuit. In other words, the section of line from the junction to the cavity must behave as a quarter-wavelength stub. The local-oscillator line is terminated by the crystal and is usually not seriously mismatched.

If no resonant cavity is used, the mixer line is matched in both directions—at one end by the crystal and at the other by the antenna. The local-oscillator line might be made to have a characteristic admittance twice that of the mixer line and the standing-wave ratio in it might

therefore be nearly unity. With a line only one-quarter wavelength long, however, this would not be necessary, since the load presented to the oscillator would change very slowly with frequency, although the voltage standing-wave ratio would be about two.

The coupling of the local oscillator is adjusted by rotating the loop in the local-oscillator cavity. A range in coupling from zero to full coupling is achieved for a rotation of 90° from a position with the loop in the plane of the magnetic field to a position perpendicular to the magnetic field in the local-oscillator cavity. The great advantage of this circuit is that full coupling between the local oscillator and crystal can be obtained without danger of interaction with the signal circuit of the mixer, provided the intermediate frequency is high compared with ν_0/Q_L, where Q_L is the loaded Q of the oscillator cavity and ν_0 is the radio frequency. Thus the local-oscillator power required is reduced from 25 or more milliwatts to about one milliwatt. For mixers that have no resonant cavity in the input circuit, this coupling circuit is especially useful, since the capacitive-probe type does require large oscillator power in that case. It is also simpler than the probe coupling circuit when it is necessary to include a resistor disk for maintaining a matched local-oscillator line.

3·10. Local-oscillator Coupling in Waveguide Mixers.—In waveguide mixers for the wavelength region for which the previously discussed waveguide crystal mount is used, the LO coupling problem is similar to the coaxial-line problem, but is complicated by the fact that the local oscillators commonly used (723A/B, 2K25, and 2K45) have coaxial-line output leads of a very special type. These output lines end in a small dielectric-encased antenna which is supposed to couple as a probe to the waveguide. In many early mixers that were built and put into service, this antenna was used to couple local-oscillator power directly to the mixer by allowing the antenna to project by an adjustable amount into the mixer waveguide at an appropriate place. The adjustment of the probe insertion was made by using a tube mount, on the broad side of the rectangular waveguide of the crystal mount and mixer, which could be adjusted in spacing from the waveguide. In this way the antenna at the end of the coaxial line projecting from the base of the tube was made to extend into the waveguide by a variable amount. Local-oscillator coupling of this kind has recently been completely abandoned because it does not afford a controllable load admittance at the oscillator tube. Only enough coupling is needed to ensure that a few per cent of the available local-oscillator power is coupled into the waveguide of the mixer, in accordance with the preceding discussion. Decoupling of the signal from the local-oscillator circuit is thus assured but, because only a small percentage of the available local-oscillator power is coupled

out of the LO output line into the waveguide, a large standing-wave ratio can exist in the output line. Since the line has a physical length of about 3 in., it is electrically about 2.5 wavelengths long and the electrical length is strongly dependent on the oscillator wavelength. Thus, the load admittance presented by this output line to the oscillator cavity varies rapidly with wavelength. Wavelengths are found, consequently, at which the oscillator operates very erratically or not at all. If the same

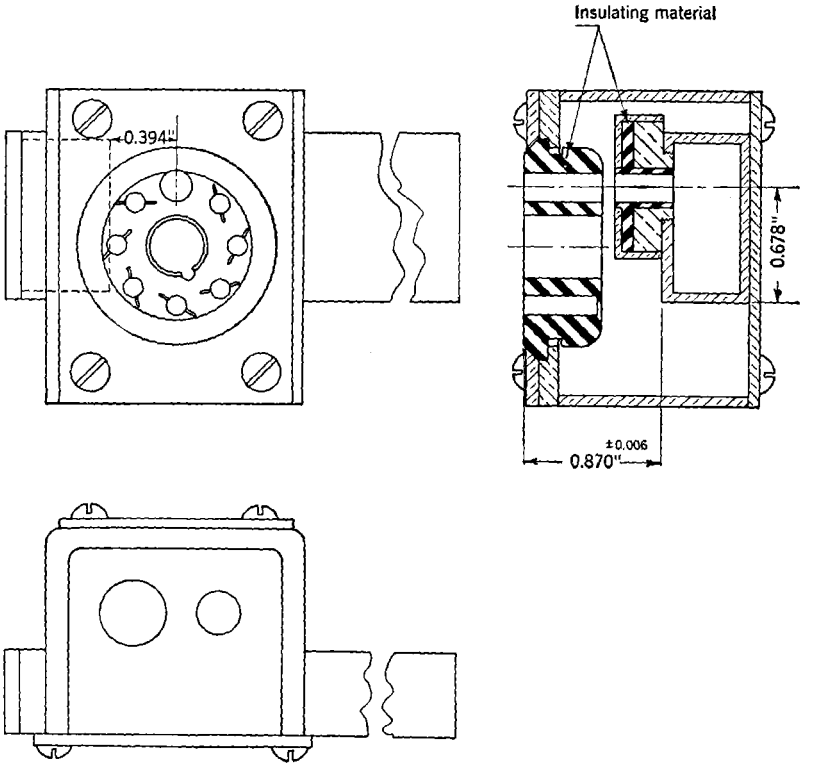

FIG. 3·15.—Test mount for a 2K25.

tube is used in a circuit in which the tube is operated into a reasonable load admittance, it can be tuned smoothly through these same wavelength regions. The fault, therefore, can definitely be attributed to the load circuit.

With a given tube, a coupling circuit of this type operates satisfactorily at some wavelengths, and its simplicity would recommend it for a simple mixer even if the tuning range were restricted. It is found, however, that the wavelengths of satisfactory operation are not the same for

various tubes of the same type, because the electrical length of the output coupling line is not controlled. Thus, many otherwise satisfactory tubes must be discarded in favor of others which have output lines of different electrical lengths, when the tube is coupled to the mixer in this way.

As a result of the difficulties of this kind which have been encountered, a definite circuit for coupling these oscillators to a waveguide has been made a part of the oscillator specifications. With this circuit, almost the full power available from the oscillator is coupled to a matched load terminating the waveguide. Continuous tuning of the oscillator over its specified tuning range results if the waveguide has a nonreflecting termination. To be certain that this is true, the specifications require that each tube be tested or this property in the specified mount, and the tube must pass a test for minimum output power in the same mount.

A mixer that is to use one of these tubes as a local oscillator must present to the tube the same admittance as is presented to it in this test mount if continuous tuning and reasonable output power are to be assured. Thus, the tube must be mounted with the same probe position, as regards insertion and position laterally and longitudinally on the waveguide, and the waveguide must be approximately matched at its load end. Figure 3·15 shows the important features of the test mount or the 2K25 tube. In some mixers to be described in later sections, the tube mount is not identical with this in all details because it could not easily be made so. In these mixers, extensive tests with large numbers of tubes were made to ensure that the mixers would operate satisfactorily over the required tuning range with the great majority of tubes.

3·11. A Directional Coupler for Coupling the Local Oscillator to the Mixer.—A simple mixer for the 3-cm region can be coupled to the local oscillator in a variety of ways. In view of the requirement that the local oscillator operate into a special circuit it seems advisable that two separate waveguides be used, one for the mixer proper, and one for the local oscillator and load circuit, with a coupling circuit between these waveguides which transmits the required amount of local-oscillator power from the local-oscillator waveguide into the mixer waveguide. This suggests that a "directional coupler" would be the ideal circuit to use. A directional coupler is a special network having four pairs of terminals and having the property that power sent into one pair of terminals is almost completely transmitted to a matched load on the opposite pair. A small fraction of the power is coupled into a third pair of terminals and none to the fourth. The symmetry is such that if the direction of power flow is reversed the small amount of power is available from the fourth pair of terminals and none from the third. At microwave frequencies, the directional coupler can be realized by a structure such as

that shown in Fig. 3·16. The details of the design of circuits of this kind will be found in Vol. 11, Chap. 14, but a qualitative description of the operation of the directional coupler is given here to facilitate the discussion of its use as an LO coupling circuit.

Two waveguides running parallel to one another are coupled together by two channels of the same width as the waveguides but of smaller narrow dimension and one-quarter wavelength long. These channels are spaced one-quarter wavelength apart, as indicated in Fig. 3·16. Both of these dimensions are only equivalent electrical dimensions because corrections must be made to compensate for end effects. The operation as a directional coupler depends on the fact that each channel excites a wave in one waveguide when a wave is sent through the other. The excited wave propagates only in the same direction as the exciting wave because destructive interference takes place between the two components traveling in the other direction. As a wave that is sent into the structure

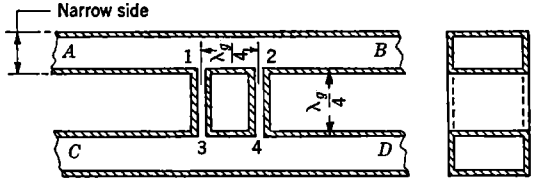

FIG. 3·16.—Waveguide directional coupler.

at A passes the channels, a small percentage of the energy is sent down each channel. If the coupling is small, the amplitudes of the waves in the two channels are almost the same. Each of these waves excites waves propagating in both directions in the lower waveguide but the component traveling toward C arriving at 3 by way of the path through 2 and 4 is opposite in phase to that excited by way of the path through 1 and 3 because it has traveled one-half wavelength farther. Hence, the two waves traveling toward C interfere destructively. The two waves traveling toward D are in phase with each other and, consequently, a wave of twice the amplitude, or four times the power, of that which would result with a single channel is propagated toward D. Because of the symmetry of the device it can be seen that a wave sent into B propagates primarily to A with a small part sent to C and none to D, and similarly for the other branches.

The amount of power that is coupled from the one waveguide to the other is dependent on the width of the channels. The characteristic impedance for rectangular waveguides of the same broad dimension is proportional to the narrow dimension b. The junction formed between a channel and the main waveguide may be considered as equivalent to a

series connection and, therefore, the impedance loading one of the channel waveguides is twice the characteristic impedance of the main waveguides if both ends of the loading waveguide are matched. In units of the characteristic impedance of the channel waveguide the load impedance is $2b/b'$, where b is the narrow dimension of the main waveguide and b' is that of the channel. At the other end of this channel, because the channel is one-quarter wavelength long, the impedance is the reciprocal, or $b'/2b$. Returning to units of the characteristic impedance of the main waveguide, the impedance at the input end of the channel is $(b')^2/2(b)^2$. This impedance may be considered as appearing in series with the load impedance in the waveguide on the side of the channel opposite to the side connected to a signal generator. If all four waveguides are matched, a fraction, approximately equal to $(b')^2/2(b)^2$, of the power available from a signal generator on one waveguide would be coupled by a single channel into the other waveguide. With two channels, a fraction of the power approximately equal to $(b')^2/(b)^2$ is coupled into a matched load at one end of the other waveguide.

To be used as an LO coupling circuit, the directional coupler of Fig. 3·16 would be excited by the local oscillator at A and by the received signal at C, and it would be terminated by a matched dummy load at B and by a crystal mount at D, and a complete mixer results. The fraction of the received signal power which is lost by transmission to the dummy load at B is the same as the fraction of the total local-oscillator output power which is transmitted to the mixer crystal. One disadvantage of the directional coupler in this application is that it is very difficult to provide an adjustable coupling for it. Thus the only way of achieving an adjustable local-oscillator drive is to use a dissipative attenuator between the local oscillator and the coupling channels. If this is done, the coupling must be designed to give the required local-oscillator drive under the most adverse conditions of oscillator output power and crystal admittance. The signal power lost into the local-oscillator circuit is independent of the attenuator adjustment and, therefore, is always that associated with the amount of coupling and is not reduced when a high-power oscillator and a good crystal are used. This is not a serious disadvantage but its existence should be realized. Many other forms of directional couplers can be made and it would not be worth while to go into the details of all of these here. Any directional coupler, however, with an appropriate coupling factor would be satisfactory. With a 2K25 tube, the minimum output power is specified as 15 mw and the local-oscillator drive desired for crystals of the 1N23 type is about 1 mw. A directional coupler for this combination should couple, from the local oscillator to the crystal, $\frac{1}{15}$ of the available power. Such a coupler is sometimes called an 11.8-db coupler.

It should be pointed out that there is a smaller loss of signal caused by the local-oscillator circuit with a directional coupler than there is with a coupler of the simpler nondirectional type discussed in connection with Eqs. (2) and (5) for the mixer circuit without a resonator. The similarity between Eqs. (2) and (5) was stated to show that the fraction of signal power lost could not be made smaller than the fraction of available local-oscillator power delivered to the crystal, which is the same condition that exists for the directional-coupler circuit. There is a difference, however, in that, in the former example, the available power was that in the mixer, and if a matched load such as a resistor disk is provided, only about half the power actually available from the oscillator is available in the mixer. With a directional coupler it is the total power available from the oscillator which enters into the reciprocity relation. Consequently, the directional coupler results in only half as large a signal loss as the simpler coupling, if the full coupling is being used. The fact that the signal loss does not decrease with more favorable conditions, however, means that this advantage is lost when attenuation must be used between the oscillator tube and the directional coupler.

With the mixer preceded by a resonant circuit such as a TR cavity, there is no such advantage from the use of a directional coupler over the nondirectional circuits. It was shown that the fractional loss of signal power with a simple coupling circuit can be as small as one quarter of the fraction of the local-oscillator power available in the mixer delivered to the crystal. With a matched load, such as the resistor-disk circuit discussed in Sec. 3·8, provided for the local oscillator, the local-oscillator power available in the mixer is one-half that available from the tube alone. The fractional loss in signal power, therefore, can be as small as one-half the fraction of the local-oscillator power available from the tube delivered to the crystal. Thus the signal loss with a directional coupler is twice the minimum loss possible with the simple circuit if a resonant signal circuit is used ahead of the mixer. Because the coupling with the directional coupler is independent of the admittance at the signal-input terminals of the mixer, the position of the coupler in the line between the resonant circuit and the crystal is not important. If the resonator were separated from the mixer by such a long length of line that the admittance looking toward the resonator at the injection point of the local-oscillator power varied rapidly with the frequency, a directional coupler would be superior to the simple coupling circuit. Another point of great importance when no resonant circuit is used between the antenna and the mixer is that the only source of signal radiated from the mixer would be reflection, of local-oscillator power, by the crystal, if the directional coupler is used. With the simple circuit, the amount of local-oscillator power radiated under these conditions would be the same

as the amount delivered to the crystal. Directional couplers have not been used extensively in microwave mixer circuits, chiefly because it is difficult to make them adjustable and because they have not been mechanically convenient for most applications. It will be shown later that in circuits operating with a resonant TR cavity, it is desirable that the length of line between the TR cavity and the crystal be kept short. Most directional couplers transmit the coupled wave in the same direction as the original wave, as does the one of Fig. 3·16, and this requires that the local-oscillator tube be located at some distance from the crystal. This requirement has not been compatible with the desire for short line length between the TR cavity and the crystal with the duplexer circuits used and, consequently, other circuits have been found more adaptable to the service. The design of a mixer, whether a coaxial-line or waveguide type, using a directional coupler for the local-oscillator injection is straightforward and any of the directional-couplers that are of convenient shape and have the required amount of coupling may be used.

3·12. A Single Channel for Local-oscillator Coupling.—A simple nondirectional circuit for coupling the local oscillator to a waveguide mixer, which is similar to the directional coupler of Fig. 3·16 in principle but contains only one coupling channel, can be used. Such a coupling circuit is illustrated in Fig. 3·17. Following the qualitative argument given for the channel width of the directional coupler, the power coupled from one waveguide to the other, with all four pairs of terminals matched is approximately $(b')^2/2(b)^2$. If this circuit is used as the LO coupling circuit for a mixer, the oscillator output power can be sent into A or B and a matched dummy load placed on the other end of this waveguide. The signal would be incident at C and the crystal mount would be at D. Since the coupled power is the total power taken out of the local-oscillator waveguide, with a termination in the mixer waveguide at each end which is matched at the local-oscillator frequency, the power transmitted to the crystal is just half the power coupled from one guide to the other, or $(b')^2/4(b)^2$. If the mixer has a resonant filter such as a TR cavity in the signal line, the coupling depends upon the admittance presented by this circuit, at the local-oscillator frequency, at the coupling channel. Because the junction is a series connection, the largest coupling occurs when this admittance is very large and the coupling is then approximately $(b')^2/(b)^2$. All of the power taken out of the local-oscillator waveguide is transmitted to the crystal and this power is twice the amount without the resonator since the impedance terminating the cross-coupling

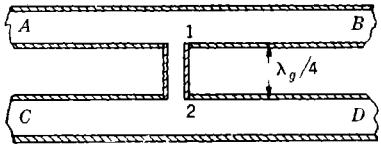

FIG. 3·17.—Nondirectional coupling circuit.

channel is 1 instead of 2 in units of the characteristic impedance of the main waveguide.

The amount of the coupling for the single channel can be made variable by the addition of an adjustable susceptance element in the channel. In Fig. 3·18 the effect of adding a capacitive susceptance in the coupling channel at a point midway between the two waveguides is illustrated on an admittance chart. The load admittance in units of the characteristic admittance of the channel was taken as 0.25 at point (1).

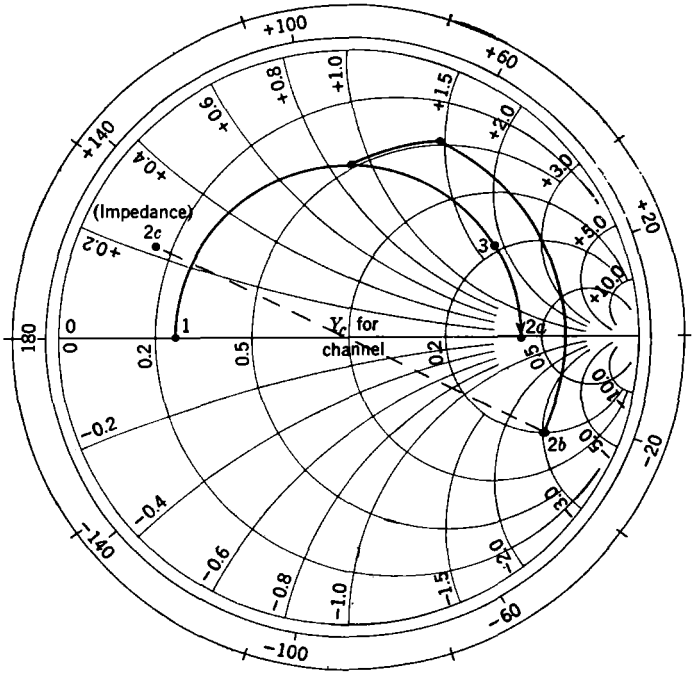

FIG. 3·18.—Admittance diagram illustrating effect of adjustable susceptance for coupling.

Without the susceptance, the admittance at the input end of the channel corresponds to the point (2*a*) or a conductance of 4 in units of the characteristic admittance of the channel. Since this conductance is added in a series circuit in the local-oscillator waveguide, the impedance is more significant, and this is 0.25 in units of the characteristic impedance of the channel or 0.125 in units of the main-waveguide impedance. Hence, the power coupled from the local-oscillator waveguide to the other would be about 12.5 per cent of the power delivered by the local oscillator to the dummy load. Only one half of this power goes into the crystal. With a capacitive susceptance of 0.5, in units of the admittance of the channel,

added at the midpoint of the channel, the admittance at the input end of the channel is that of the point (2*b*). The corresponding impedance is that of the coordinates at (2*c*) or $0.16 + j0.22$ in units of the characteristic impedance of the channel. In units of the characteristic impedance of the main waveguide this is $0.08 + j0.11$. Therefore, 8 per cent of the power delivered by the local oscillator to the load is transmitted into the mixer waveguide and the delivered power is slightly changed because of the appearance of the reactive term.

It might be thought that to avoid the reactive term the susceptance should be added at a point such as (3), where the circles of constant conductance are approximately orthogonal to the circles of constant standing-wave ratio. Since it is just as important, however, to avoid large reflections in the local-oscillator waveguide as in the mixer waveguide, this is not so. Although the resultant variation of the series impedance presented to the local-oscillator waveguide would be resistive, that presented to the mixer waveguide would be reactive and severe reflections would result. It is sometimes more convenient to use a channel three quarters of a wavelength long for such a coupling circuit. Then, an inductive susceptance at the midpoint, or a capacitive susceptance at a position a quarter wavelength either side of the midpoint would produce a coupling that decreased with increasing susceptance. An inductive susceptance used at the midpoint of the quarter-wavelength channel would give increased coupling with increasing insertion. The mismatch that would be introduced by such a coupling device would increase with increasing coupling and could become serious unless a limit on the range of adjustment were provided. It is difficult to set a limit on the adjustment since the susceptance of a structure introduced into the waveguide varies rapidly with frequency when the susceptance is large. Under most circumstances the amount of mismatch that can be tolerated is larger for conditions requiring small local-oscillator coupling because the crystals that have small conversion loss usually require small local-oscillator drive to achieve optimum over-all noise figure.

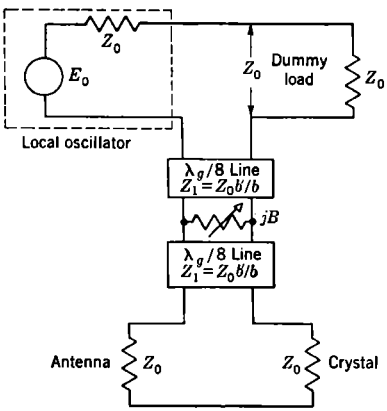

FIG. 3·19.—Equivalent circuit of channel local-oscillator coupler.

Expressions giving the amount of coupling between the local oscillator and the crystal, and the reflection coefficient caused by the coupling

channel, as a function of the added capacitive susceptance can be derived from a consideration of the equivalent circuit of Fig. 3·19. All impedances and admittances are expressed in units of the characteristic impedance or admittance of the main waveguides and it is assumed that the local oscillator, dummy load, signal generator (receiver antenna), and crystal are all matched to the waveguides at the local-oscillator frequency. The series impedance introduced in the local-oscillator circuit by the coupling channel and mixer can be calculated by transforming the load admittance of the channel, $b'/2b$, through the eighth-wavelength line by the transmission-line formula for a lossless line,

$$Y = Y_0 \frac{Y_t + jY_0 \tan (kl)}{Y_0 + jY_t \tan (kl)} \tag{7}$$

where Y_0 is the characteristic admittance of the line, Y_t is the terminating admittance, k is the wave number equal to $2\pi/\lambda_g$, and l is the length of the line. For the eighth-wavelength lines kl is $\pi/4$ and the transmission-line formula is

$$Y = Y_0 \frac{Y_t + jY_0}{Y_0 + jY_t}. \tag{8}$$

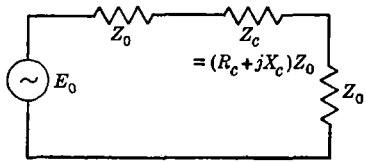

FIG. 3·20.—Equivalent of local-oscillator circuit.

Next, the variable susceptance B is added and the resultant admittance, again transformed by this formula, gives the admittance Y_c at the input end of the channel. The impedance Z_c is the reciprocal of Y_c and the entire circuit becomes equivalent to that of Fig. 3·20. The fraction of the available local-oscillator power coupled into the crystal is

$$T = \frac{2R_c}{(2 + R_c)^2 + X_c^2}, \tag{9}$$

and the absolute magnitude of the reflection coefficient is

$$|\Gamma| = \left|\frac{1 - (1 + Z_c)}{1 + (1 + Z_c)}\right| = \left[\frac{R_c^2 + X_c^2}{(2 + R_c)^2 + X_c^2}\right]^{1/2}. \tag{10}$$

By algebraic manipulation, these relations become

$$T = \frac{4A^2[A^2B^2 + (2 + B)^2]}{[A^2B^2 + (2 + B)^2 + 4A^2]^2 + A^2B^2[(2 + B) - A^2(2 - B)]^2} \tag{11}$$

and

$$|\Gamma| = \left\{\frac{16A^4 + A^2B^2[(2 + B) - A^2(2 - B)]^2}{[A^2B^2 + (2 + B)^2 + 4A^2]^2 + A^2B^2[(2 + B) - A^2(2 - B)]^2}\right\}^{1/2} \tag{12}$$

where the quantity A is the admittance terminating the channel in units of the characteristic admittance of the channel. The value of A^2 which gives the required maximum coupling T_0 may be found by setting B equal to zero in Eq. (11) and solving for A^2. If this is done,

$$A^2 = \frac{1}{2T_0}[(1 - 2T_0) - (1 - 4T_0)^{1/2}]. \tag{13}$$

For T_0 small compared with $\frac{1}{4}$, this expression may be simplified by the expansion of the second term in series and the neglecting of terms higher than the third. The result is

$$A^2 = T_0.$$

This is identical with the result obtained for the fraction of the total power delivered to the crystal, if the series impedance of the channel

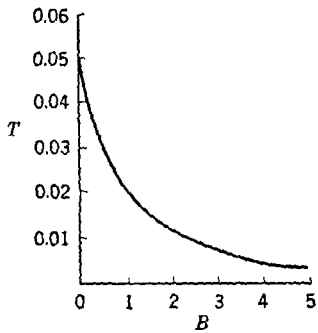

FIG. 3·21.—Fraction of LO power coupled vs. susceptance.

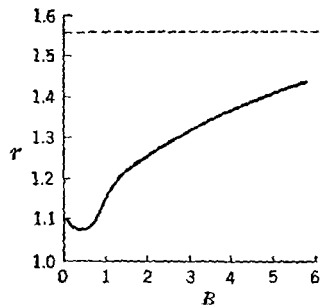

FIG. 3·22.—Standing-wave ratio vs. susceptance.

in the local-oscillator waveguide is small compared with the characteristic impedance of the local-oscillator waveguide.

A typical example of a 3-cm mixer would employ a 2K25 oscillator tube and a 1N23 crystal. The oscillator tube may be expected to give at least 15 mw of power and the local-oscillator drive required for the crystal is less than 1 mw. Hence, T_0 could be 0.05. If this value is used in Eqs. (11) and (12), the coupling and reflection coefficient as functions of the adjustable susceptance can be found. In Fig. 3·21 the fraction of the power available from the oscillator coupled into a matched crystal is plotted as a function of the susceptance. In Fig. 3·22 the standing-wave ratio is plotted as a function of susceptance, found from Eq. (12) by the relation

$$r = \frac{1 + |\Gamma|}{1 - |\Gamma|}.$$

The standing-wave ratio has a maximum of 1.55 at infinite susceptance, corresponding to zero coupling. This amount of mismatch relative to the optimum load admittance for the tube has been found not to cause trouble with the great majority of tubes.

3·13. An Exact Equivalent Network for the Coupling Channel.—The analysis of the circuit on the basis of a simple series connection to represent the junctions is not sufficiently accurate to allow exact specification of the length and width for a particular coupling factor. As in almost all microwave circuits, there are end effects, associated with the excitation of higher modes in the waveguide, or coaxial line, which cause some departure from the results expected on the basis of the simple circuit. However, by means of some exact equivalent circuits for a junction of this type, developed by J. Schwinger, it is possible to calculate the length and width for minimum mismatch (equivalent to a pure series resistance) for a given coupling factor. Schwinger derives an equivalent network for the junction where the terminals of the network are considered to lie in planes, in the respective waveguides, adjacent to the junction. Because many modes exist in the immediate vicinity of the junction, the admittances in these planes cannot be specified, but the equivalent circuit predicts the admittances which would be measured at planes an integral number of half wavelengths back from the junction in the respective waveguides. The agreement of these equivalent circuits with experiment is very good. By making use of them, the conventional technique of cut and try can be eliminated. For waveguide and coaxial-line structures of many other types, Schwinger's technique has been used and the results are being compiled in Vol. 10 of this series.

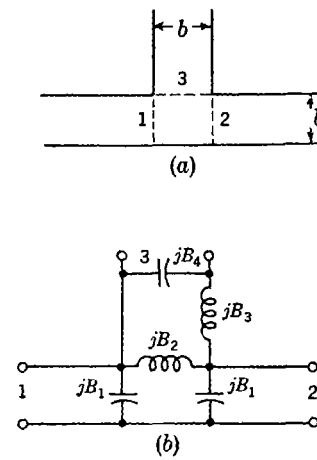

FIG. 3·23.—Equivalent circuit for an E-plane T-junction.

In Fig. 3·23a is shown a cross-sectional view of the T-junction where b and b' are the inside dimensions of the waveguides. In the same figure the equivalent network is shown where the terminal pairs are in the planes corresponding to the dashed lines of the structure. The components of the network are represented as capacitances or inductances depending upon whether the sign of the susceptances is positive or negative. They do not necessarily show the corresponding frequency dependence. This is evident from the relation below giving the values

of these susceptances in terms of b, b', and k the wave number, equal to $2\pi/\lambda_g$.

$$B_1 = \frac{kb'}{2}\left[1 - \frac{1}{\pi}\left(\frac{b'}{2b}\right)\right],$$

$$B_2 = -\frac{kb'}{6}\left[1 - \frac{3}{2\pi}\left(\frac{b'}{2b}\right)\right],$$

$$B_3 = -\frac{j}{kb'},$$

$$B_4 = \frac{kb}{\pi}\left[1 - \ln\left(\frac{2b'}{b}\right) + \frac{\pi}{6}\frac{b'}{b} - \frac{1}{3}\left(\frac{b'}{2b}\right)^2\right].$$

All the susceptances except B_2 have the direction of change with frequency normally associated with a low-frequency susceptance of the same sign but the dependence is inversely or directly with the waveguide wavelength and not the free space wavelength.

A technique that can be used for the calculation of the length and width of a channel for a particular coupling is to estimate the width on the basis of the simple series-junction formula, $T_0 = (b')^2/4(b)^2$. Next, the admittance at terminal pair (3) with pairs (1) and (2) connected to matched loads, or unit admittances, can be calculated. From this admittance the standing-wave ratio and phase in the coupling channel can be found and from this a plane in the junction at which the load admittance would be real is found. The difference in position between this plane and the plane containing the terminals of the equivalent circuit is the end effect. The length of the channel is made to be physically the one-quarter or three-quarters of a waveguide wavelength between these corrected planes. If this length is used for the narrow waveguide, the admittance presented to the terminal pair (3) of the second network can be calculated and hence the amount of power coupled across found, as well as the standing-wave ratio and phase in the input waveguide. In examples the standing-wave ratio is found to correspond to that which would be found for a simple series circuit coupling out the same fraction of power, and the choice of the length on the basis of the end-effect planes is considered to be valid. From the phase of the standing wave, the position of end-effect planes for the terminal pairs (1) and (2) can be found and, thus, the circuit can be considered as equivalent to the simple series circuit connected between these planes. All three of the planes are found to fall inside the junction from the planes defining the position of the terminals of the equivalent network.

The algebra of this calculation is perfectly straightforward but quite tedious. There is no point in giving an example here, although some results to show the magnitude of the divergence from the simple idea of series connection may be of interest. For a mixer for 1.25 cm, using

main waveguides 0.170 by 0.420 in. ID, the coupling and end corrections have been calculated for several channel widths. It was found that the end corrections amounted to about 0.025 in. at each end of the channel, thus shortening the length of the channel by about 0.050 in. from a quarter-wavelength in the waveguide for channel widths from 0.060 in. to 0.100 in. In this range of widths, the power coupled into the mixer differed by less than 15 per cent from the value calculated from the simple series circuit with the formula $(b')^2/4(b)^2$. A calculation for 3.2 cm, using a main waveguide having inside dimensions of 0.400 by 0.900 in. and a channel width of 0.180 in. gave an end correction of 0.060 in. The fraction of the local-oscillator power delivered to a matched crystal was found to be 0.042 compared with a value of 0.051 calculated for the simple series circuit. Because the disagreement of the coupling factor calculated from the simple circuit with that calculated from the exact equivalent circuit is not large, for present purposes the choice of the width of the channel on the basis of the simple series junction is probably sufficiently precise. The main value of the network representation is the end-effect correction in the length of the coupling channel. This is simple to calculate compared with the calculation of the exact coupling factor.

All of the foregoing discussion applies to a mixer that has no high-Q resonant circuit between the crystal and antenna, and the antenna, therefore, appears as a matched load to the local-oscillator wave. If a TR cavity is used between the mixer and antenna, as shown previously the coupling between the local oscillator and the crystal can be increased by a factor of 4 by proper choice of the position of the TR cavity relative to the coupling channel. The TR cavity should be so positioned that a short circuit appears in approximately the plane of the appropriate terminal pair in the equivalent network. The coupling can be made very small by placing the TR cavity in a position a quarter wavelength different from this, resulting in an open circuit at this plane, since the circuit of the junction does correspond approximately to the series circuit. Since such a position must be avoided, a mixer intended to be operated in a wide frequency band should be designed with a line length between the TR cavity and the coupling circuit so short that the admittance presented at this plane by the TR cavity does not deviate appreciably from a short-circuit admittance within the band.

The exact position of the TR cavity relative to the junction can be calculated with the aid of the equivalent network. The admittance at the terminals of the network, with the complete circuit assembled may be calculated. The TR cavity should then be so positioned that the susceptance of the waveguide terminated by the TR cavity is the negative of the susceptance component of the calculated admittance The result of such

a calculation shows that the TR cavity should be positioned somewhat closer to the junction than an integral number of half wavelengths and an equivalent plane for the simple series circuit representation can be given.

For the example of the 1.25-cm waveguide cited previously, the correction is such that the position of a short circuit due to reflection from the TR cavity appears almost at the center plane of the junction. For this purpose, then, it appears that the series circuit is adequate and that the tedious calculation required to apply the exact equivalent circuit

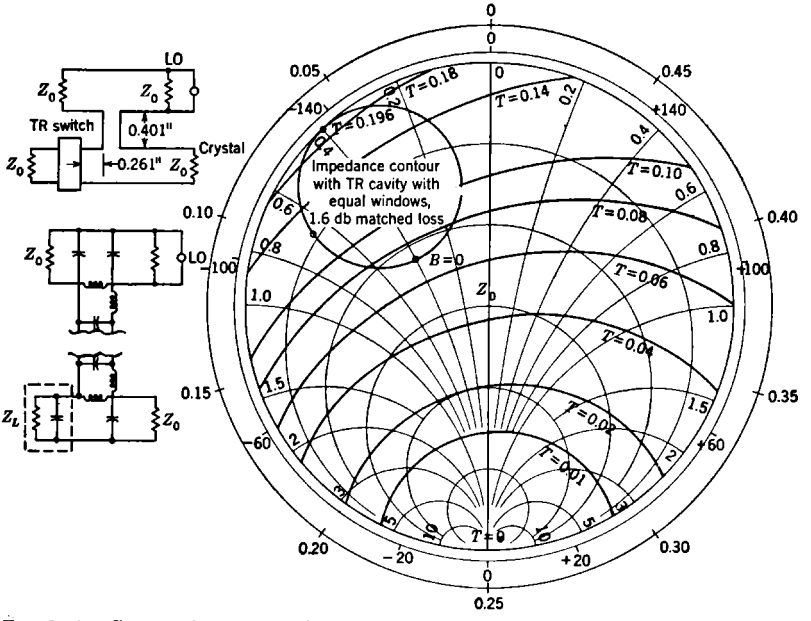

FIG. 3·24.—Curves of constant LO power to crystal, vs. Z_L, the impedance of TR cavity plus part of network.

gives a result too little different to be worth while, except for the calculation of the length of the channel.

When a TR cavity is used, the coupling factor is strongly dependent upon the crystal admittance since a wave reflected by the crystal is returned to it by the TR cavity in a phase dependent on the reflection coefficient of the crystal. As an illustration of this point, two plots are given in Figs. 3·24 and 3·25. Fig. 3·24 shows contours of constant power delivered to a matched crystal as a function of the impedance across the terminals of the network representing the junction in the mixer waveguide on the other side of the junction from the crystal. This impedance includes the susceptance of the capacitance jB_1 associated with the

terminals and is for the 1.25-cm waveguide 0.420 in. by 0.170 in. ID with a coupling channel 0.100 in. by 0.420 in. and 0.401 in. long. Also plotted on this diagram is a contour of the terminal impedance for a TR cavity, spaced such that the short circuit, when the TR cavity is detuned, appears 0.261 in. from the plane of the terminals of the equivalent network. The contour is valid for a typical 1B26 TR tube having about 1.6 db loss and equal coupling irises. The contour does not

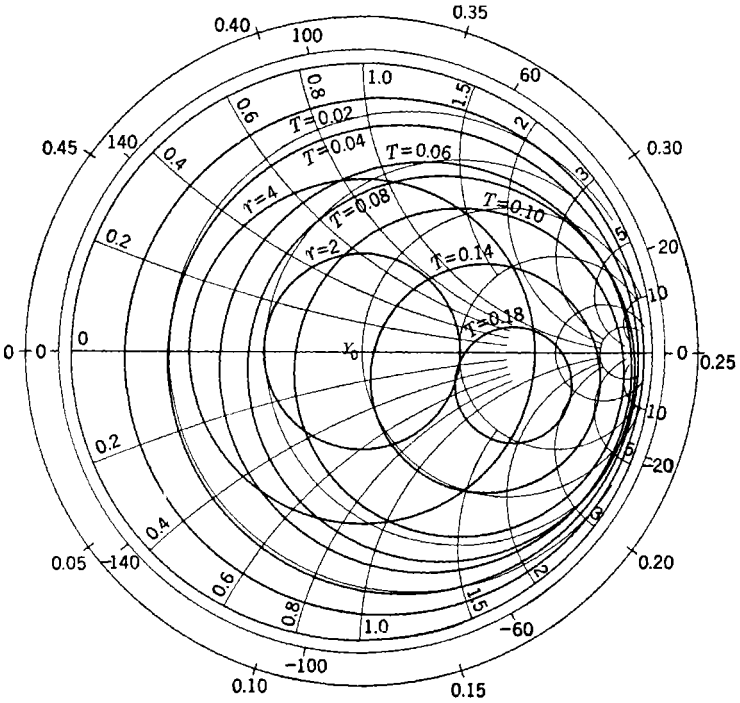

FIG. 3·25.—Contours of constant power delivered to crystal vs. crystal admittance, for TR admittances equal to $(1.4 + j2.4)$ Y_0 at LO frequency. The TR switch is the 1B26; the intermediate frequency is 60 Mc/sec.

represent the TR-cavity and signal-generator admittance alone, but includes the capacitance associated with the terminals of the junction. This plot is significant since the Q of the 1B26 tube, the standard TR cavity for this wavelength, is not high enough to allow the TR cavity to be considered as completely reflecting at the local-oscillator frequency when the tube is resonant at the signal frequency with ordinary intermediate frequencies of 30 or 60 Mc/sec.

Figure 3·25 shows, for this same coupling circuit, contours of constant power delivered to the crystal as a function of the crystal admittance as

measured at the crystal terminals of the network. Here, the intermediate frequency has been assumed to be such that the TR cavity is detuned from local-oscillator frequency to an extent sufficient to transmit half the maximum power. A 60-Mc/sec intermediate frequency would about correspond to this situation with a 1B26 tube, since the loaded Q of these TR tubes is about 200.

3·14. An Iris for Local-oscillator Coupling.—For operation with a resonant TR cavity, because of the more efficient coupling resulting, a simpler type of circuit has been used extensively in the 3.2-cm band and adjacent regions. This coupling device consists of a simple inductive window between two adjacent parallel waveguides with a common wall on their narrow sides. A circuit of this type is illustrated in Fig. 3·26.

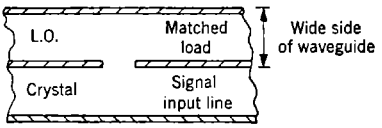

FIG. 3·26.—H-plane window for local-oscillator coupling.

The aperture in the wall may be either circular or rectangular, although rectangular apertures running the full height of the common wall have usually been used. These apertures are made less than a half wavelength in width, and, to a fair approximation, the circuit may be considered as a lumped inductive susceptance in the plane of the window. Circuits coupled to the narrow wall of a waveguide can be shown to behave approximately as shunt-connected circuits where the admittance at the wall is transformed by a quarter wavelength of waveguide into the center of the waveguide. This transformed admittance adds in shunt to the admittances of the loads at the ends of the waveguide.

The simple aperture coupling is less efficient than the channel coupling just discussed in the sense that the reflection due to the aperture is larger than that due to the channel for a given coupling factor. That this is so can be shown from the simple equivalent shunt circuit in the following way. Suppose that all four waveguides in Fig. 3·26 are connected to matched loads representing the local oscillator and a dummy load in the upper waveguide and the crystal and signal generator in the lower.

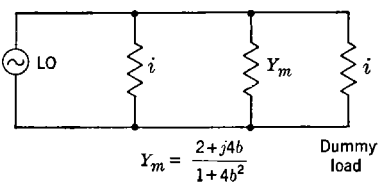

FIG. 3·27.—Equivalent shunt circuit for aperture-coupling circuit.

The admittance in the lower waveguide at the center is 2 in units of the characteristic admittance of the waveguide. Transformed through the quarter wavelength of waveguide to the aperture, the admittance is $\frac{1}{2}$ in the same units. To this is added the inductive susceptance of the aperture, $-jb$, and then this is transformed through another quarter wavelength of waveguide to the center of the upper waveguide. Thus,

the admittance of the mixer waveguide, appearing in shunt in the upper waveguide, is

$$Y_m = \frac{1}{0.5 - jb} = \frac{0.5 + jb}{0.25 + b^2} = \frac{2 + j4b}{1 + 4b^2}.$$

The equivalent shunt circuit is illustrated in Fig. 3·27 and from this the fraction of the available local-oscillator power delivered to the crystal can be shown to be

$$T = \frac{1}{4(1 + b^2)}. \tag{14}$$

A plot of this function is given in Fig. 3·28*a*. The standing-wave ratio on the other hand, is given by the formula

$$r = \frac{1 + |\Gamma_a|}{1 - |\Gamma_a|}$$

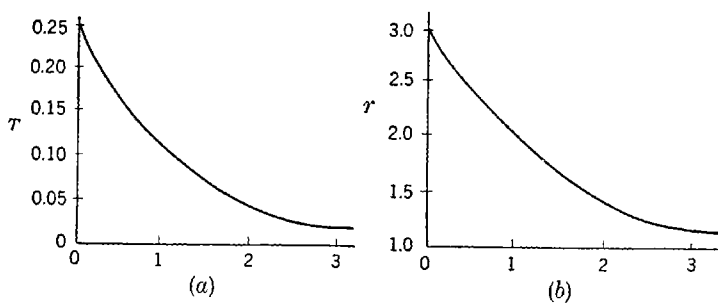

FIG. 3·28 *a*, *b*.—The effect of susceptance of coupling iris. (*a*) Coupling factor vs. susceptance; (*b*) voltage standing-wave ratio vs. susceptance.

where $|\Gamma_a|$ is the reflection coefficient for the load $(Y_m + 1)$ or

$$|\Gamma_a| = \left|\frac{Y_m}{2 + Y_m}\right|.$$

$$|\Gamma_a| = \frac{1}{2}\left(\frac{1}{1 + b^2}\right)^{1/2} = T^{1/2}.$$

This is to be compared with the reflection coefficient for the channel circuit for which the reflection coefficient is just

$$|\Gamma_c| = T,$$

for a coupling factor T small compared with 0.25. Using the above expression for $|\Gamma_a|$ in the equation for the standing-wave ratio, a curve can be plotted with the result shown in Fig. 3·28*b* for the voltage standing-wave ratio as a function of the aperture susceptance.

The symmetry of the circuit, neglecting the frequency dependence of the local-oscillator admittance, makes it apparent that the same

standing-wave ratio would be produced in the mixer. From this it is evident that the simple aperture coupling circuit has considerably greater interaction between the signal and local-oscillator circuits than is necessary. For this reason it has been found to operate satisfactorily only under the condition that a resonant TR cavity is used, so positioned that the admittance of the TR cavity at the local-oscillator frequency seen in the mixer waveguide in the plane containing the center of the coupling aperture is very small. Because the TR cavity reflects the wave incident upon it in such a phase as to reinforce the wave traveling toward the crystal, as in the other examples, the power delivered to the crystal is increased almost fourfold, for an aperture of large susceptance. The analysis on the basis of the simple shunt circuit is similar to the previous one except that the admittance of the mixer at the aperture is unity

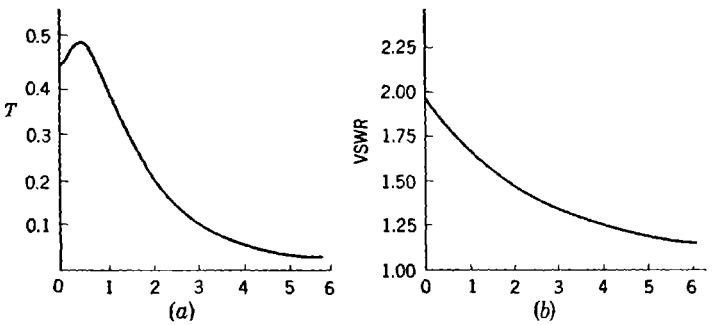

FIG. 3·29.—The effect of susceptance of LO coupling iris when a resonant TR cavity is used. (*a*) Coupling factor vs. susceptance; (*b*) standing-wave ratio in LO waveguide vs. coupling susceptance.

instead of two. The coupling factor as a function of susceptance for this case is

$$T = \frac{4(1 + b^2)}{9 + 5b^2 + 4b^4}$$

and this function is plotted in Fig. 3·29*a*. The standing-wave ratio vs. susceptance plot of Fig. 3·28*b* applies here for the signal standing-wave ratio in the mixer, with the crystal matched to the signal, but the standing-wave ratio in the local-oscillator waveguide is changed by the presence of the resonant TR cavity. The reflection coefficient in the local-oscillator waveguide is

$$|\Gamma| = \left(\frac{1}{9 + 4b^2}\right)^{1/2}$$

and for large susceptance the standing-wave ratio differs little from that in the previous example. Figure 3·29*b* gives a plot of the standing-wave ratio due to this reflection coefficient as a function of the susceptance.

Because the space available for a radar mixer is usually limited, the applications of this LO coupling circuit have mostly been a variation of this scheme. Figure 3·30 shows, in a perspective view, a mixer using such a coupling circuit, with the positions of the coupling probe of the 2K25 local oscillator, the crystal, and the 1B24 TR cavity indicated. The oscillator tube is mounted with a tube socket above the waveguide at the right with its antenna inserted the specified distance at an off-center position as recommended in the test specifications. The waveguide is terminated with a matched load at the near end. The waveguide is short-circuited at the other end and the iris that couples the local-oscillator power to the mixer is located in the side wall with its center about a quarter wavelength closer to the antenna of the tube than the short circuit. The antenna of the tube is located at a distance from the far end such that, at 3.33 cm, the admittance of the waveguide in this direction is the same as that of the short-circuited waveguide 1 cm long, as specified in the mount for the tube. This length was chosen by experiment and is electrically equivalent to a short-circuited line just less than $3\lambda_g/4$ in length, although its physical length differs from this considerably. In this way the local-oscillator tube is operated into a load circuit differing at the midband frequency from the recommended one, for a small coupling to the mixer, by a small conductance component in the admittance. The admittance loading the oscillator varies more rapidly with frequency than it does in the test mount because the short-circuited waveguide is effectively a half wavelength longer than that recommended. Experience has shown that oscillators that operate satisfactorily in the test mount very rarely give trouble in this circuit.

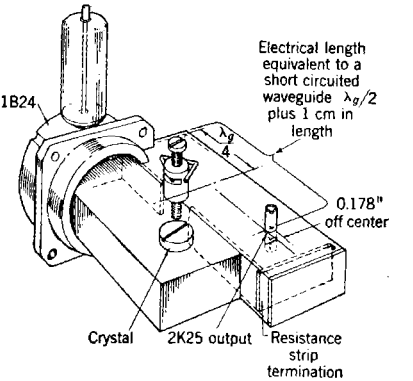

FIG. 3·30.—Mixer circuit with iris-coupled local oscillator.

So far in this discussion the effect of the LO coupling circuit on the admittance presented to the signal has been calculated assuming that the local oscillator presents a matched admittance to the waveguide at the signal frequency. This is not true because the oscillator contains a resonant circuit tuned to the local-oscillator frequency. The reflection coefficient of the local oscillator is very likely almost unity at the signal frequency. There is a danger that this reflection may give rise to an admittance at the coupling window which can cause serious reflection

of the signal. In the circuit of Fig. 3·30, this effect is less serious than in the circuit in which the local oscillator and dummy load are on opposite ends of the waveguide, since only at frequencies at which the output coaxial line of the oscillator tube resonates by itself does the presence of the oscillator antenna in the waveguide have a large effect. At other frequencies the local-oscillator waveguide is loaded with an open-circuit admittance from the side of the coupling iris away from the LO tube and an admittance approximately matched to the waveguide characteristic admittance on the other side of the iris.

As shown previously it is necessary to adjust the coupling of the local oscillator if optimum results are to be achieved with production crystals and oscillators. With this circuit the adjustment must be made by

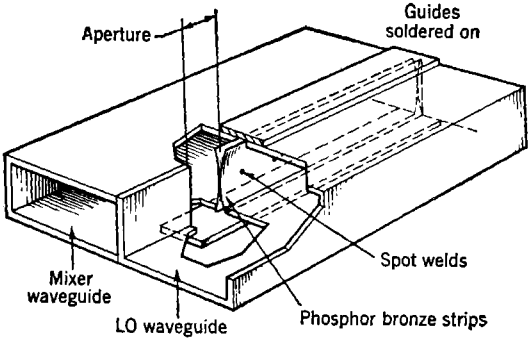

FIG. 3·31.—Adjustable rectangular coupling iris.

variation of the iris susceptance. With a rectangular iris this can be done by making the whole side wall slidable, with spring contact between it and the top and bottom walls of the waveguide. Figure 3·31 shows such a slidable wall made from two curved strips of phosphor bronze about 0.005 in. thick and spot-welded down the center line with their convex surfaces together. This spring slides in a channel between the top walls and the bottom walls of the two adjacent waveguides and contact is maintained by the wiping action on the sides of these channels. A strip is soldered over the outside of the channels to keep the strip properly aligned. With an adjustment of this kind, the effective position of the iris is altered as the width is changed, but for a small adjustment the change in position is not serious.

A more commonly used adjustment that avoids the variation of position and the troubles usually encountered with sliding contacts is a combination of a circular or rectangular inductive iris with a capacitive-screw post. This is shown in Fig. 3·30 mounted above the center of the coupling iris. The screw structure is shown in more detail in Fig.

3·32. The capacitive screw is the same type that is used in matching transformers or in the channel coupling arrangement for coupling adjustment. It uses the quarter-wavelength-choke principle to minimize erratic behavior due to poor contact in the screw threads. In the 3·3-cm mixers a 6-32 screw is a convenient size. An iris $\frac{9}{32}$ in. in width has been found sufficiently narrow to allow the coupling to be made small enough for any combination of a 723A/B or 2K25 tube and a 1N23 crystal with the screw completely retracted. In the diagram, a post projecting into the iris from below is dotted in and ordinarily this is absent from the structure. It is sometimes desirable, however, to have an adjustment in which the coupling decreases with increasing insertion of the screw, and then the post is added. The post is sufficiently long to give a capacitive susceptance more than enough to produce shunt resonance with the inductive susceptance of the iris. The entire structure, therefore, appears as a capacitive susceptance that increases with increasing screw insertion.

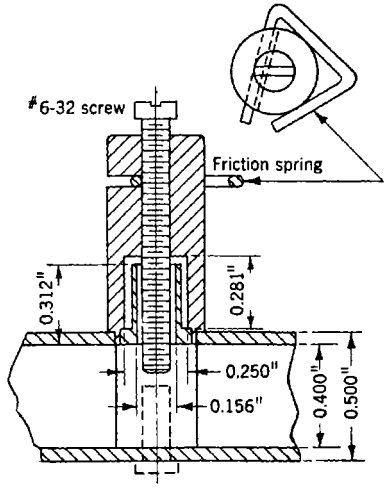

FIG. 3·32.—Adjustable coupling iris using choke screw.

For mixers that must be foolproof in operation it is important to provide an upper limit on the coupling that can be achieved with the adjustment. This can be done with the iris and screw structure by correct choice of the length of the screw. In applications where a wide band of frequencies must be covered, the frequency-sensitive nature of the capacitive susceptance of the screw does not allow the limit to be chosen precisely. A screw length that, at short wavelengths, gives the whole structure the desired minimum inductive susceptance gives, at longer wavelengths, a minimum inductive susceptance somewhat larger. In such a case the device cannot be made entirely foolproof. With the structure including a fixed post the limiting coupling is, of course, determined by the length of the post and the same arguments about the frequency selectivity apply except that the largest coupling occurs at the longest wavelengths.

For smoothness in the adjustment and also to protect against changes caused by vibration, many locking schemes have been tried. The best from the viewpoint of simplicity and permanence was a triangular spring

made from spring wire fitting into a slot in the screw mount and riding in a thread of the screw. This is illustrated in Fig. 3·32, with a top view of the screw mount and spring also shown. The diameter of the spring wire is about the same as the distance between consecutive screw threads. It is important to make the slot in the screw mount at least as wide as two screw threads in order that the spring may ride freely in a thread, independently of the location of the threads with respect to the slot.

Many variations of these schemes of local-oscillator coupling are possible and some of them will become apparent in mixers shown for illustration in later chapters. The general nature is the same, however, and it would not be worth while to attempt to describe all of these variations. The type that is best fitted to a given mixer is determined by the shape which the mixer may take and by some of the supplementary functions which it is sometimes called upon to perform. These supplementary functions are the subject of Chap. 4.

3·15. Signal-input Circuit.—The only remaining problem in the design of a complete mixer is that of transferring the incoming signal power from the circuit connected to the antenna into the crystal mount. If the line to the antenna is similar to the line in which the mixer is built, the mixer may simply be connected to the antenna line. The mixer tuning should be such that, with the local oscillator operating at the proper level and frequency and with a matched i-f load in place, the admittance of the mixer for small signals with all crystals is as near the characteristic admittance of the line to the antenna as possible. Measurement may show a small correction from the tuning arrived at with signals at the local-oscillator level to be desirable. For most mixers it has been found that the small-signal admittances did not differ sufficiently from those measured at local-oscillator level to warrant changing the mount.

When the mixer signal comes from a TR cavity, the mixer circuit must be made to load the TR cavity properly. With TR tubes having integral cavities designed to operate between matched waveguides, the design procedure is not greatly influenced by the cavity, but with loop-coupled cavities or those designed to operate between coaxial lines, a coupling circuit must be a part of the mixer. With these cavities, the major part of the adjustment of the tuning of the mixer for the best scatter of admittances with all crystals and over the frequency band required can not be done independently of the design of this coupling circuit. For this reason the coaxial-line mixers have been designed for operation with definite TR cavities, and the measurement of the matching conditions has been carried out almost exclusively on the input side of the TR cavity. If the effects, on the conversion loss and i-f admittance of the crystal, of the line length between the crystal and the TR cavity are neglected,

the matching conditions can be completely determined by measurements of the input admittance to the TR cavity. Such measurements show whether the TR cavity is properly loaded by the crystal circuit and from these measurements the total transmission and reflection loss of the circuit can be inferred.

A schematic view of a TR cavity and an equivalent lumped-constant circuit are shown in Fig. 3·33. The equivalent circuit applies only with a special choice of the position of terminals on the input and output lines. To find the position of these terminals in the input and output lines a signal may be sent into one of these lines at a frequency far from the resonant frequency of the shunt resonant circuit. In the equivalent circuit, a short circuit would appear at both the input and the output pairs of terminals and, hence, the position at which a short circuit is found in the coaxial lines, with the cavity detuned, is the position of the terminals. If the cavity is then tuned to resonance, causing it to add zero susceptance to the circuit, the admittance that is measured at this point

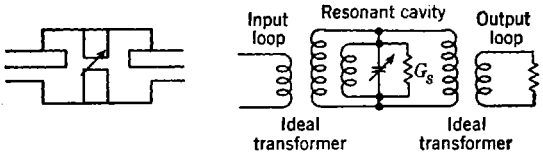

FIG. 3·33.—Loop-coupled TR cavity and equivalent circuit.

in the output line is proportional to the sum of the admittance presented by the load at the corresponding point in the output line and a conductance that is a measure of the dissipative loss of the cavity. The output admittance is transformed by the two ideal transformers by a numerical factor and the conductance measuring the loss of the cavity is transformed by a numerical factor by the ideal transformer representing the input coupling. It is difficult to show that this circuit should apply exactly, but its use is justified by very extensive experience in which perfect agreement has been found between calculations from it of the transmission loss and frequency dependence and measurements on actual circuits. The transformation ratio of the ideal transformers is determined primarily by the fraction of the magnetic flux in the cavity which is linked by the loops, and the admittance stepup of the input-circuit loop can therefore be increased by the use of a smaller loop or by setting it at an angle in such a way that its plane is not perpendicular to the magnetic field of the cavity.

Iris-coupled cavities can be described in exactly the same way, although the analogy between the iris and an ideal transformer is less obvious than for the loops. The position of the short circuit with the cavity detuned depends upon the length and diameter of the loop,

whereas with reasonably small irises it falls almost exactly in the plane of the iris. For loops of the sort used with the $\frac{5}{16}$-in. coaxial-line mixers, the position of the short circuit is a point approximately a half wavelength back along the line from the terminus of the loop, including the perimeter of the loop as a part of the line.

The equivalent circuit of the TR cavity and mixer can be further simplified. At the terminals chosen in the manner explained, the equivalent circuit of Fig. 3·34 applies, where g_g is the antenna conductance (equal to the characteristic admittance of the line), g_s and jb_c are the conductance and susceptance parts of the cavity admittance transformed to the terminals in the input line, and g_m and jb_m are those of the load admittance transformed to the input terminals of the TR-cavity circuit. From this circuit, it is apparent that, if the TR cavity were tuned for maximum power delivered to the crystal, the resultant susceptance of the circuit would be zero. For such tuning b_c is, therefore, just the negative of b_m. This means that if the mixer had been made tunable, and g_m and b_m could be completely adjusted in the mixer, there would be an infinite number of equivalent tuning positions for the combination, corresponding to different values of b_m. It is thus apparent that for complete tunability of a mixer-plus-TR-cavity combination it is only necessary to adjust g_m in the mixer. Since the transformation ratio of the output loop is influenced by its position in the TR cavity, a completely tunable mixer can be made by using a loop of adjustable flux linkage in combination with the tuning of the TR cavity. To set up a mixer and TR-cavity combination fixed in tuning, except for the TR-cavity tuning itself, it is only necessary to choose the size of the output loop of the TR cavity on the basis of admittance scatter diagrams. The largest bandwidth and smallest dissipation of signal power in the lines of the mixer are obtained when the crystals present a matched load to the mixer line, since then the admittance presented to the output terminals of the TR cavity is no more dependent on frequency than the admittance at the crystal. It is on this basis that the standard 10-cm loop-coupled mixer was designed. It was made to operate with four different TR cavities covering the band from 8 to 12 cm simply by choosing the flange on which it was mounted on each of the cavities for the best scatter of input admittances to the TR cavity with representative crystals. The size of the input loop of the TR cavity is chosen on the basis of the function of the TR cavity of protection at high level, and it is this coupling that determines the values of g_s.

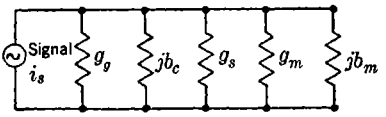

FIG. 3·34.—Transformed equivalent circuit of TR cavity and mixer.

The range of input admittances which can be tolerated with this circuit can be found as follows. Assuming the TR cavity to be tuned such that the susceptances cancel out, the fraction of the available signal power delivered to the crystal can easily be shown to be

$$T = \frac{4g_g g_m}{(g_g + g_m + g_s)^2}. \tag{15}$$

A measure of the input standing-wave ratio is $(g_m + g_s)/g_g$ and if T in decibels of loss is plotted against this quantity, the curve given in Fig. 3·35 results. A typical value for g_s of 0.245, resulting in a 1-db total loss with a matched output load, has been assumed. Most TR cavities now in use show a loss under this condition between 1.0 and 1.5 db.

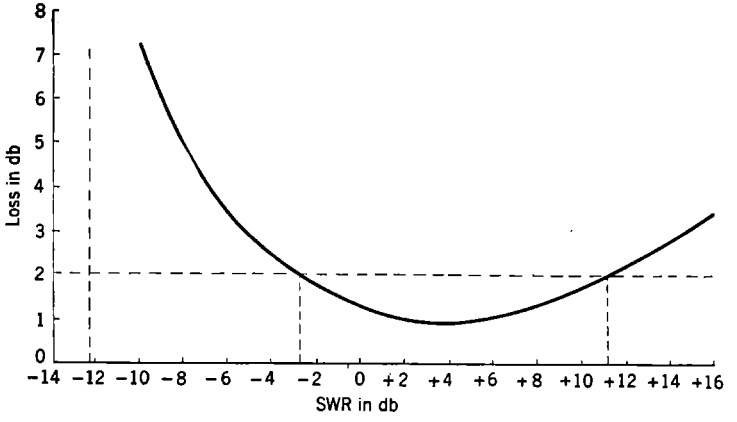

FIG. 3·35.—Transmission plus reflection loss for a TR cavity mixer, in decibels, vs. input standing-wave ratio, in decibels.

The standing-wave ratio has been plotted in decibels, twenty times the common logarithm of the voltage standing-wave ratio, and the positive values correspond to a conductance at the input terminals greater than the characteristic admittance of the line, and the negative values to a conductance smaller than the characteristic admittance. From the plot it is evident that it is not sufficient to measure only the standing-wave ratio since the curve is very unsymmetrical. From the point of view of the loss of signal power, a very much larger standing-wave ratio can be tolerated with a phase corresponding to the positive side of the plot than with a negative phase. The positive phase corresponds to a standing-wave pattern with a minimum at the input terminals and such a minimum has the same position when the TR cavity is tuned for greatest transmission of signal as when the TR cavity is detuned. For negative values, the tuned condition shows a minimum position which is shifted by

a quarter wavelength from the detuned position and the minimum shifts rapidly with tuning. In most 3-cm applications, the loss arising from mismatch at the crystal has been kept below 1 db. In Fig. 3·35, which applies to the 3-cm 1B24 TR cavity, the standing-wave-ratio limits that correspond to such a loss are −3 db and +11 db. In a narrow frequency band the spread need not be this great, but for the wideband mixers covering a band 12 per cent wide, these limits were just met using the crystals representative of the borderlines of the admittance scatter.

The ability of the tuning of the TR cavity to compensate for the susceptance part of the load admittance has been used to reduce the spread in transmission loss with various crystals over the required frequency band. In the course of measurement of admittance scatter of large numbers of crystals in the 3-cm band, it was observed that the scatter was not purely random about a center point but that it covered an area longer in the susceptance direction than in the conductance direction. It is also found that the major direction of change of admittance with frequency is in the susceptance direction. Because the mixers were intended to be used with a tunable TR cavity and because the standard tune-up procedure would be to tune for maximum received signal, it was thought possible to use the TR cavity in combination with the mixer to obtain a reduced resultant scatter for the combination. Such a utilization of the TR cavity as partial tuning for the mixer has been called "TR-aided tuning" and has been used in many fixed-tuned 3-cm mixers. To be most effective in reducing the admittance scatter at a fixed wavelength, the effective electrical position of the TR cavity should be an integral number of half wavelengths from the crystal. This causes the large susceptance scatter at the center line of the crystal mount to appear as a susceptance scatter in the load admittance presented to the TR cavity. That this should hold over the widest possible band requires the minimum number of half wavelengths. Consequently, most wideband mixers have been made only one-half wavelength long from the position of the short circuit with a detuned TR cavity to the center line of the crystal mount. In this way it has been found possible to keep the loss caused by crystal mismatch less than 1 db over the ±6 per cent band from 8500 Mc/sec to 9600 Mc/sec.

Iris-coupled coaxial-line mixers have been used in the 10-cm band in conjunction with a TR cavity, and some advantages can be had through the use of the TR-aided tuning principle. The shape of the admittance scatter found for 10-cm crystals does not show a decided elongation in one direction, although there is a common direction of change of admittance with frequency. The actual direction of the change depends upon the nature of the crystal mount as well as on the position in the mount at

which the admittance is measured. It can be specified only for the unit as a whole, and the best length of line between the coupling iris and the crystal does not necessarily bear any integral relationship to a half wavelength. The coupling iris loads the TR cavity with an admittance that increases with increased height (along the lines of electric field in the cavity) and with increased projection of the coaxial line into the cavity.

3·16. Mounts for 1N26 Crystals and a Waveguide Mixer for the 10-cm Band.—At the end of this chapter is given a group of drawings of several representative simple mixers. The coaxial-line mixers are all designed for use with 1N21A, 1N21B, and 1N21C crystals, and the mixers having a 1 by $\frac{1}{2}$-in. waveguide for 1N23, 1N23A, and 1N23B crystals.

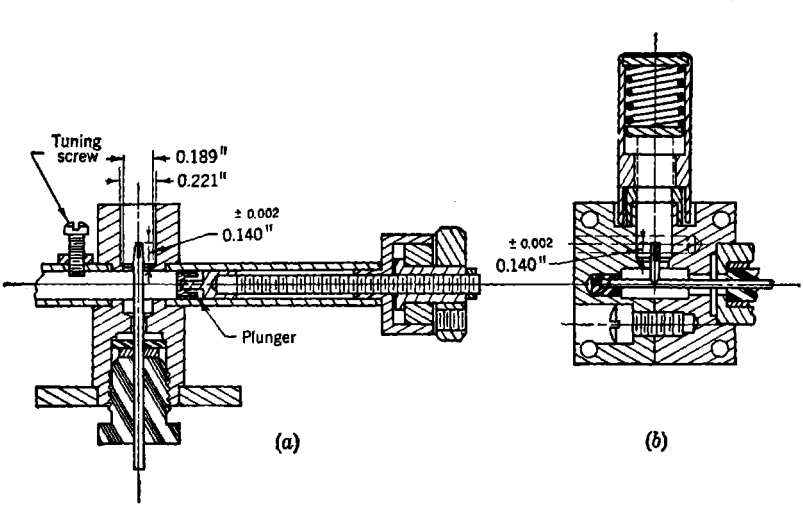

FIG. 3·36.—1N26 crystal mounts. (*a*) Turntable mounts; (*b*) crossbar mount.

Also included are a 1.25-cm mixer designed for operation with 1N26 coaxial-line crystals and a mixer having a similar structure designed for 1N21B crystals in the 10-cm band. The design of the 1N26 crystal mount for 1.25-cm operation is based on different principles from that of the two types described in previous sections. The 1N26 crystal was designed to match a mount having particular properties at this wavelength. The crystal mount was, therefore, particularly easy to design. The 1N26 is tested in a mount in which it terminates a coaxial line having an inner conductor with a diameter of $\frac{1}{16}$ in. and an outer conductor with a diameter of $\frac{3}{16}$ in. ID. The mount is adjusted so that a matched load on this coaxial line absorbs all the available power of the signal generator. It is, thus, necessary only to make a matched transformer to transform from a waveguide 0.170 by 0.420 in. ID to a coaxial line of this

size with suitable provisions to bring out the i-f voltage and rectified current. An average crystal unit will then terminate the waveguide in a matched load.

Mounts of two different types or, more exactly, waveguide-to-coaxial line transitions have been used for this purpose. These are shown in cross-section in Fig. 3·36 *a* and *b*. The type fabricated in ordinary waveguide, with an adjustable plunger and screw, was adopted as standard for testing purposes, with each unit pretuned. The tuning adjustments were fixed by wax, such that there was no reflection in the waveguide section, with a dummy matched load in the crystal socket. The other unit, shown in Fig. 3·36*b*, is made from a solid block using a crossbar-supported probe waveguide-to-coaxial-line transition. In this way the crossbar, with a choke a quarter wavelength from the side wall, is used to bring out the low-frequency components. The crossbar unit has been used most extensively in system mixers because it fits conveniently into complex mixers and because it is less frequency-sensitive than the other mount.

A critical dimension on these 1N26 crystal mounts is the length of the slotted center conductor from the shoulder in the outside conductor to the end of the fingers. If it is too long it may strike a shoulder on the center conductor of the crystal unit before the outer conductor of the crystal meets the shoulder in the mount. If it is too short, a considerable length of the small-diameter center conductor of the crystal unit is left exposed and this has a transforming effect on the crystal admittance.

The 10-cm mixer designed by the same principle as this crossbar mount does not have the simplicity of being just a matched waveguide-to-coaxial-line transformer. It was developed to fill the need for a waveguide crystal mixer to be used with the wide bandpass fixed-tuned TR cavity which has an output iris designed to couple to a matched 3- by $1\frac{1}{2}$-in. waveguide. As in the 1.25-cm crossbar mount, the conductance part of the admittance at the plane of the crossbar is controlled primarily by the distance from the top of the waveguide to the crossbar. The susceptance part is determined primarily by the distance from the crossbar to the short circuit in the waveguide beyond the crossbar, although the crystal itself projects into the waveguide. A complete mixer is made from this mount by the provision of the LO coupling circuit on the opposite end of the crossbar from the end from which the i-f signal is derived. Several of these units having different crossbar positions but basically the same circuit, have been designed to cover the region from 8 to 11 cm, each covering a band about ± 4 per cent in width.

3·17. Self-protection of the Mixer Crystal.—Crystals operated as mixers in radar systems have been plagued with burnout caused by insufficient protection from high-power signals by the TR switch. For

this reason several special features have been adopted in an effort to reduce the frequency of burnout in operating and nonoperating systems.

At the time when the flat power, lasting for the duration of the transmitter pulse, was thought to be responsible for burnout, considerable effort was made to include in the mixer design a feature called "self-protection." This feature was based on two special properties of the TR cavity and crystal mixer. First, the TR tube, while firing, maintains an essentially constant voltage across the arc, independent of the input and output couplings. The arc can therefore be considered as a constant-voltage generator having no internal impedance and the power delivered by it to a load circuit is directly proportional to the load conductance. The second property of the combination is that the crystal, since it is a nonlinear device, shows a different admittance at high level than at low. Because the TR leakage power is at a considerably higher level than the local-oscillator power in the mixer, the crystal may be expected to show an admittance considerably different from match and, therefore, the flat leakage power of the TR cavity into the crystal may be considerably different from that delivered to a matched load. It could be either greater or smaller depending upon the direction of change of the admittance as seen by the TR cavity. In order to ensure that the leakage was reduced by this admittance change, the admittance as a function of power level was measured for many crystals. The line length was then chosen so that the conductance seen by the TR cavity decreased with increasing power and a mixer designed in this way was said to have self-protection.

During the early stages of the design of 3-cm mixers it was apparent that there was something to be gained in low-level operation through the use of TR-aided tuning described in Sec. 3·15. This required a half-wavelength spacing between the TR cavity and the crystal. Measurements of the change of admittance with power level showed that the conductance at the center line of the crystal increased with increased power. The two criteria for choice of the line length from the TR cavity to the crystal were thus incompatible, since the half-wavelength spacing resulted in the inverse to self-protection, because more power would be delivered to the crystal than to a matched load. An investigation of the magnitude of the effect was therefore undertaken and it was found that the crystal conductance for most units increased by about 30 per cent, when the incident power level was increased from 1 mw to 50 mw or more. Beyond this level there was very little change. With this amount of change and if at least 50 mw of leakage power is assumed, the power delivered to the crystal would be about 80 per cent greater for the half-wavelength spacing than for a spacing equal to an odd number of quarter wavelengths.

At about this time it was learned that the spike energy was most frequently responsible for burnout, and it was therefore apparent that the dependence of the spike energy on the load admittance is more important. A reliable determination of this dependence or of the effective admittance of the crystal as a function of spike energy has not been made. It is felt, however, that the spike energy absorbed by the crystal is less dependent on the admittance than is the flat power. A serious burnout problem has not been encountered in practice with the improved crystals now available so long as the TR tube is in good condition and the keep-alive electrode is functioning properly. The low-level operation and matching of the crystals have been used in almost all mixers to determine the line length between the TR cavity and the crystal, at the sacrifice of self-protection.

3·18. Harmonic Chokes and Shutters.—Another source of crystal burnout, especially in very-high-power radar systems (500 kw and up) is leakage of harmonic frequencies and spurious intermittent high-frequency radiation through the TR cavity. Since the cavities are usually heavily capacitively loaded at the breakdown region, the lowest mode giving unattenuated transmission with the arc firing is at a frequency two or three times the fundamental frequency. Frequencies this high and higher are, however, generated in fairly large quantities, at least sufficient to cause crystal burnout by high-powered transmitters. For this reason, some of the 10-cm coaxial-line mixers designed for operation with high-power systems include a filter circuit that strongly reflects the third harmonic. This filter consists of a pair of concentric-line cups on or in the center conductor. The cups are a quarter wavelength long at the third harmonic (3 cm) and so spaced that the reflections at the fundamental frequency cancel one another. These cups can be seen in the iris-coupled coaxial-line mixer included in the group of drawings at the end of this chapter. The operation of the filter can be easily worked out with the aid of an impedance chart. Because the reflections of the two chokes cancel at the fundamental frequency, the effect they have on the mixer is to produce a phase shift making the electrical length of the line different from the physical length. There is also some frequency sensitivity of admittance added because their reflections cancel exactly only at the frequency for which the electrical length of the line between them is exactly right.

It has never been established conclusively that the incorporation of these chokes improves the protection of the crystals. The frequency range in which they are highly effective in attenuating unwanted power from the transmitter is very restricted. In the course of design of a particular high-powered 10-cm radar set, it was established that crystals were being burned out by spurious high-frequency signals notwithstand-

ing the reflection of the chokes. Considerable effort was expended in an attempt to eliminate these signals by alteration of the modulator-pulse shape, but the difficulty was not solved until a new type of gas-discharge cavity was added to the conventional TR switch. This additional cavity, known as a pre-TR switch, is simply a section of waveguide with low-Q input and exit irises with glass windows. The cavity is filled with gas at a low pressure. When a transmitted signal enters this cavity, the electrical breakdown that takes place is extensive in volume and covers a large part of the input iris. Under this condition, it is effectively cut off for all frequencies in addition to the fundamental frequency, although the fundamental-frequency leakage is still sufficient to operate the conventional TR switch following it. A circuit of this type is considerably more effective than harmonic chokes in bringing about complete crystal protection and it is certainly the task of the TR-cavity system and not the mixer to provide such protection from high-level signals. The more recent TR cavities having wide bandpass characteristics, using several resonant irises as well as resonant input and output windows, include protection of this kind. Harmonic chokes are therefore superfluous for operation with such TR switches. The details of these two TR-switch systems and their functions will be found discussed in Vol. 14 of this series.

Another device often added to the mixer in radar systems is a switch for protection against signals coming into the antenna during inoperative periods. The TR cavity, when properly operating, protects the mixer crystal from burnout not only by the signal of the local transmitter, but also by any other signal coming into the antenna. Any signal sufficiently strong to damage the crystal will cause the arc in the TR tube to fire and, therefore, the signal power is limited to a safe level in the mixer. Satisfactory operation of the TR switch, however, depends on the universally used keep-alive electrode, which maintains a small steady discharge in the gas volume of the tube, maintaining a small supply of ions to initiate an arc when a large voltage is built up across the gap of the cavity. If this keep-alive arc is not operating, as it is not when the supply voltage is shut off, the breakdown of the TR tube at high level requires considerably greater voltage and time to occur, and the result is that very large leakage energy is allowed. Thus signals may be transmitted through a TR cavity, in which the keep-alive electrode is not activated, in sufficient strength to damage the mixer crystal. It is also possible that the first few pulses of the local transmitter, which may occur before the keep-alive is fully operative, may damage the crystal. For protection against these two sources of power, a mechanical switch has sometimes been included in the mixer. The switch decouples the mixer crystal from the TR cavity when the system is turned off,

and through the action of a magnetic solenoid or a motor the switch is opened with a small time lag after the system is turned on.

Devices that are useful as switches for this purpose are few. Many structures can be coupled to a coaxial-line mixer or to a waveguide mixer to reduce the signal arriving at the mixer crystal by 30 or 40 db. Usually, however, it is found that the principal effect is one of detuning and that the attenuation of signal power at some adjacent frequency is not many decibels greater than at the original frequency with the structure removed. This is true, for instance, of a simple short-circuiting rod between the inner and outer conductors of a coaxial-line mixer. Such a rod has a large self-inductance and it acts like an inductive susceptance across the line. Its effect can be resonated out by a susceptance at the TR cavity to a degree depending upon the electrical line length between the short-circuiting rod and the TR cavity.

The most foolproof method of obtaining the required protection during shutdown periods is to disconnect the crystal completely from the circuit. This has actually been done in some 10-cm coaxial-line mixers by use of a structure like that shown in Fig. 3·37. The small-diameter rod is pulled back by a spring when the power is turned off and advanced into the fingers at the upper end by a solenoid when the power is on. The gap between the fingers and the end of the small rod is a waveguide beyond cutoff for the signal frequencies and, therefore, a large attenuation is introduced if the rod is retracted from the fingers by an amount of the order of the diameter of the coaxial line. The particular mixer in which this mechanism was used possesses a rather large standing-wave ratio, partly because of the presence of lengths of line of differing characteristic admittances. As a consequence, the admittance at the iris is frequency-sensitive and the mixer must be retuned if the frequency is changed by 1 per cent or more. The tuning is provided by making the coaxial line variable in length by a telescoping joint. A disconnect mechanism of this kind has not been applied to the wideband mixer where the coaxial line must be of uniform impedance to avoid large standing-wave ratios.

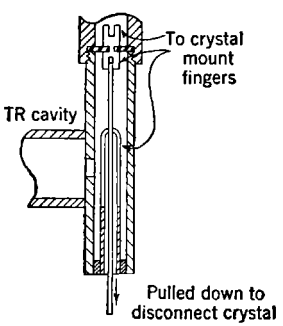

FIG. 3·37.—Crystal disconnect mechanism in 10-cm iris-coupled coaxial-line mixer.

Figure 3·38 shows another mechanism that has been applied to 10-cm coaxial-line mixers. A resonant stub a half wavelength long is used to produce a short circuit across the mixer line. A short circuit on the stub, actuated by a solenoid, makes it effectively a quarter-wave-

length stub when the system is operating. It thus has little effect on the circuit during operation, but during shutdown periods it is effective in decoupling the crystal in a narrow frequency region for which the stub produces a very large shunt admittance across the line. The systems in which this device was used all operated inside a ± 1 per cent band, and the main protection they needed was from radiation in the same band. The narrow band of large decoupling was therefore considered sufficient. It does not give protection against power at other frequencies or against damage by the local transmitter which sometimes occurs during the first few transmitter pulses.

The most effective devices not involving an actual disconnection from the crystal are sliding metallic shutters. In 10-cm systems using TR

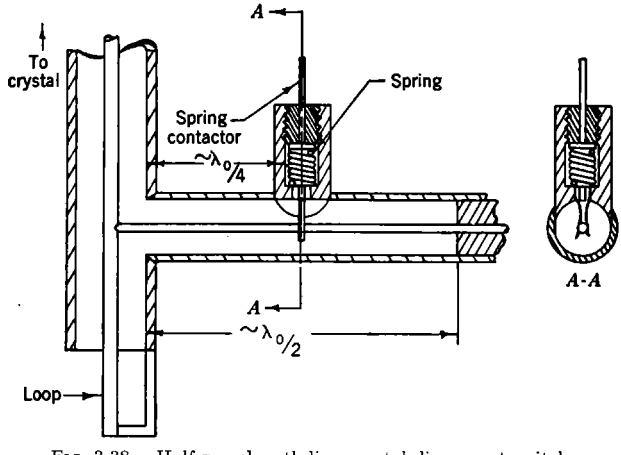

FIG. 3·38.—Half-wavelength-line crystal-disconnect switch.

switches having external cavities, a metallic shutter made from curved thin phosphor bronze with two pieces spot-welded with their convex surfaces together can be used. The shutter enters the cavity through a slot in the side wall and slides in grooves in the top and bottom walls, completely covering the output loop or iris. A drawing of this device is shown in Fig. 3·39. A shutter of this kind gives very good protection against radiation at all frequencies and has as its major disadvantage the requirement of an operating device capable of moving it through a large distance.

A shutter of the same kind is the most effective one for use in waveguide mixers and TR switches having integral cavities. The shutter enters a slot in the side wall (narrow dimension) of the waveguide between the crystal and the TR cavity and slides in channels in the top and bottom walls. It again requires a large motion since it must be all the way across

the waveguide when closed and completely removed when open. A ratchet-relay motor has been used to operate such a shutter, although it should also be possible to use a rotary motor with proper springs and limit switches.

A simple post has been used as a shutter with fair success in the 3-cm band. The post, sliding in a choke mount such as used for tuning screws, enters the center of the wide side of the waveguide and crosses to the bottom wall. At a given frequency, the post can be made to attenuate most effectively when it projects just less than the full width, for it is then resonant and completely short-circuits the waveguide. For complete protection, however, it is better to make the post contact the bottom wall of the waveguide; thereby it presents a large inductive susceptance across the waveguide. The effect of the post increases with the post diameter, and to minimize the danger of resonance with the TR cavity a spacing of one-quarter wavelength between the post and the effective position of the TR cavity is best. With a waveguide 1 by $\frac{1}{2}$ in. OD in the 3.13- to 3.53-cm band, a $\frac{5}{16}$-in.-diameter post gives attenuation greater than 30 db at all frequencies in the band.

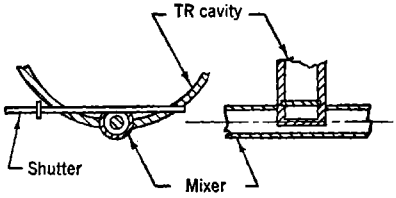

FIG. 3·39.—Protecting shutter in a 10-cm TR cavity.

3·19. I-f Output Admittance.—It is not within the scope of this volume to give a discussion of the circuit coupling the mixer crystal to the i-f amplifier. Such coupling circuits, however, must be designed with knowledge of the admittance associated with the output terminals of the mixer. The most widely used circuits are wideband doubled-tuned admittance transformers, or their equivalent, designed to give the best possible noise figure compatible with the bandwidth requirements. The susceptance part of the mixer is a part of the first tuned circuit where it is resonated in shunt. Obviously, the circuit will be incorrectly tuned if the susceptance of the mixer is not the expected value and the noise figure and bandpass characteristic suffer. The conductance part of the mixer admittance determines the degree of coupling in the double-tuned circuit and values smaller than the design value result in the double-peaked frequency response characteristic of double-tuned circuits with more than critical coupling.

It has been customary in the design of i-f amplifier input circuits to use a "dummy" mixer, that is, a mixer with a resistor replacing the crystal and having the i-f resistance of an average crystal in the same mixer under operating conditions, in place of an actual operative mixer. Such a procedure is not strictly correct since the susceptance component

of the mixer is not that of the linear parts of the circuit if a resonant circuit is used ahead of the crystal in the r-f system. As shown in Chap. 2, the reflection of the image frequency can change not only the conductance part of the i-f admittance from the value obtained if the image wave is not reflected, but also the susceptance part. This effect with good crystals and with a 30-Mc/sec intermediate frequency can be equivalent to adding or subtracting 3 or 4 $\mu\mu f$ of capacitance at the output terminals of the mixer. Coupled with the fact that the conductance of the crystal in the mixer may be from one-half to twice the value for the same crystal in a nonresonant circuit, it is obvious that the i-f input circuit must be designed on the basis of measurements on the particular mixer to be used, with representative crystals and under operating conditions at the frequency to be used.

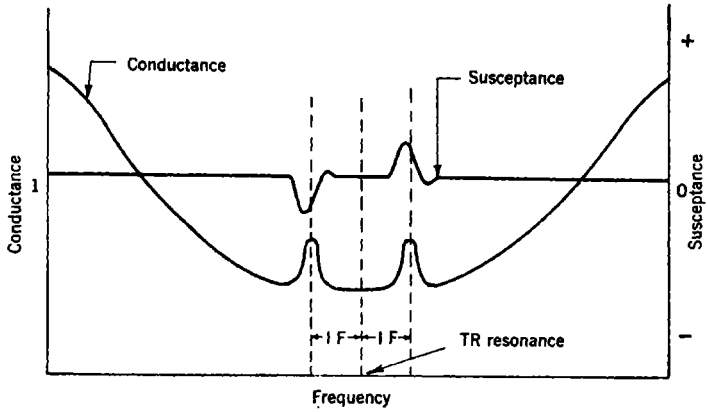

FIG. 3·40.—I-f admittance vs. LO frequency with the TR tuning fixed.

The situation is further complicated by the fact that the "phase length" between the TR cavity and the crystal seems to vary from crystal to crystal, especially for crystals made by different manufacturers. This means that, even at a fixed frequency, the i-f admittance may vary more from crystal to crystal in a resonant mixer circuit than in the nonresonant test mixers. For this reason, it becomes necessary to design the input circuit in such a way that changes in conductance by a factor of about 2, and in susceptance of about 2 $\mu\mu f$ or more at 30 Mc/sec can be tolerated. When the mixer is to be used over a wide band, changes as large as these are certain to occur, even with a single crystal, because of the change in effective line length between the TR cavity and the crystal and the consequent change in phase of the image-frequency reflection, even though this effect is minimized by the choice of a line length as short as possible. Measurement of the i-f admittance of the mixer should

therefore be done at several frequencies scattered through the operating band before the final form of the i-f input circuit is decided.

It was shown in the previous chapter that, if the signal-frequency admittance connected to the input terminals of the mixer is kept matched to the crystal and the image-frequency admittance is varied through the full range of pure susceptance, the i-f admittance should traverse a circle

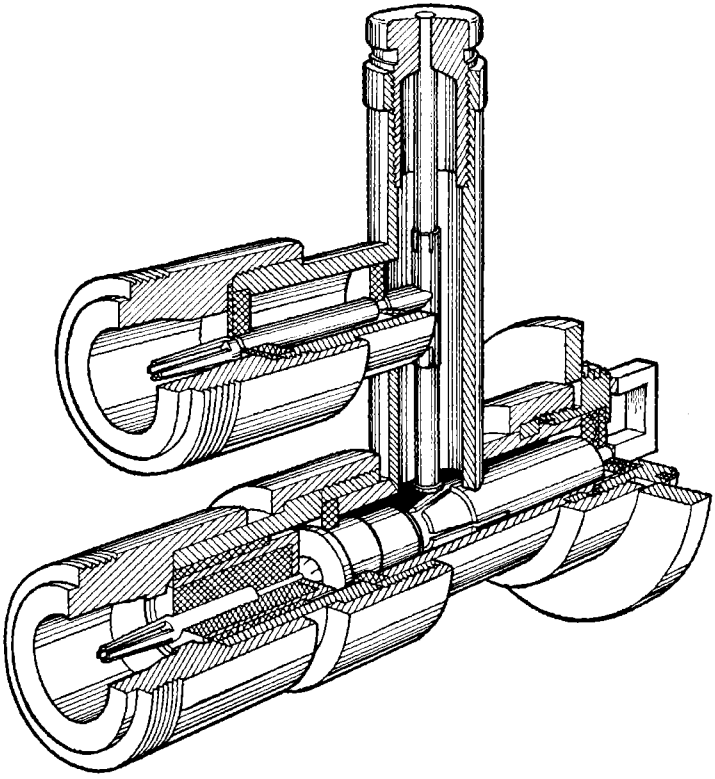

FIG. 3·41.—Coaxial-line mixer with loop coupling to be used with TR cavity and 1N21A or 1N21B crystals in 10-cm band.

on an admittance chart, with a diameter related to the crystal loss. Obviously, the effects described above are most serious with the best crystals. It has been possible to make a receiver with optimum values, of noise figure and bandpass characteristics by completely ignoring these effects, with crystals having conversion losses of 10 db or more. As the crystals improve it may become more important to design the mixer on the basis of the i-f output characteristics than on the r-f matching

characteristics if, indeed, it is not so already with crystals having conversion losses of 5 db and less.

In order to minimize the effects of the variation of i-f admittance from crystal to crystal and with frequency, it may be found that the line length from the crystal to the TR cavity which gives an i-f admittance falling on a particular part of the admittance circle may be preferred. For instance, the line length might be chosen in such a way that an average crystal at

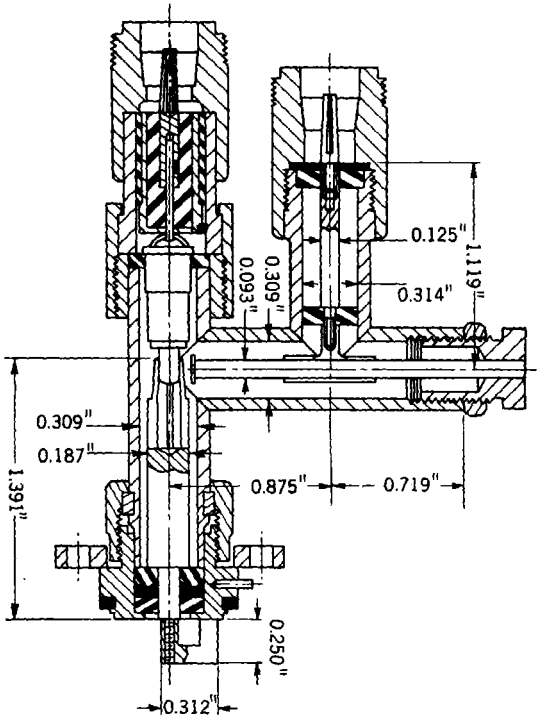

FIG. 3·42.—Cross-sectional view of loop-coupled mixer.

midband frequency gives an i-f admittance with the maximum conductance. Variation of frequency or of line length with different crystals, would then result in a small variation in conductance, since the conductance is stationary with respect to line length. However, the largest possible variation in susceptance results. The same would be true for a line length giving minimum conductance, as a consideration of the circle on an admittance diagram will show. On the other hand, if a variation in conductance is more tolerable than a variation in susceptance, the line length can be chosen between these two values, where the susceptance

is stationary with small variation in line length, but has a value differing from zero by the maximum amount. There is also the desire for minimum possible crystal conversion loss to be considered, which may set a different requirement on the phase of the image-frequency reflection.

In one instance in the author's experience the variation in i-f output admittance of a mixer with change of crystals and with frequency was considered so serious that a makeshift remedy had to be applied to the mixer to change its effective line length. This mixer was a 10-cm iris-

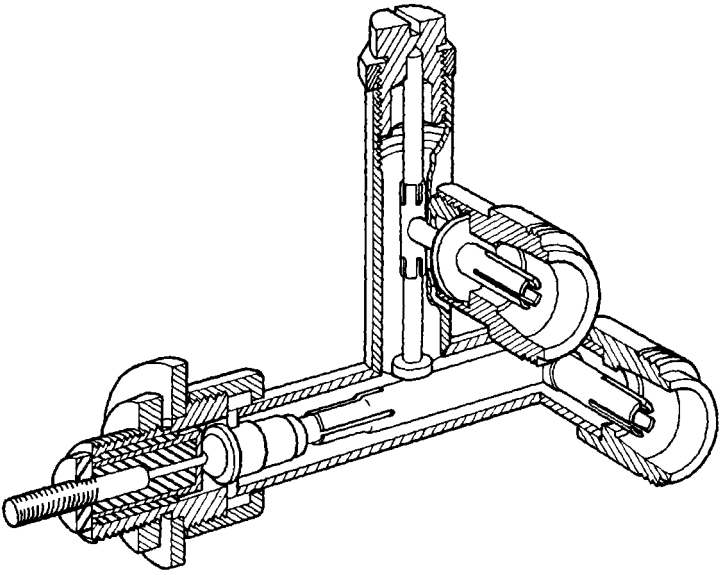

FIG. 3·43.—Mixer for 10-cm band for use with a 1N21A or 1N21B crystal without a TR cavity. The parts and dimensions are similar to those in Fig. 3·42. The signal input line is supported by a stub which is behind the LO coupling in the figure. The distance from the center line of the center conductor connecting to the crystal to the short circuit at the end of the stub is 1.000 in.

coupled coaxial-line mixer used with selected low-loss crystals. It was found that the line length was such that the maximum possible variation in conductance occurred in the 8 per cent frequency band for which it was intended. The makeshift remedy was the insertion of a polystyrene sleeve into the coaxial line of the mixer, in order to change the effective length to one giving maximum conductance at midband frequency with an average crystal. With the iris-coupled mixer, the image is reflected not by the TR cavity but by the short circuit in the coaxial line on the other side of the iris from the crystal, which, in this instance, added an extra half wavelength to the image-frequency line. Since the crystal

was about one wavelength from the TR cavity, the total image-frequency line length was large and the variation of admittance with frequency was sufficient to make the susceptance change from minimum to maximum in the 8 per cent band, after the sleeve was added. This was less serious than the previous large variation in conductance. The proper insertion of the coupling iris into the TR cavity had to be redetermined

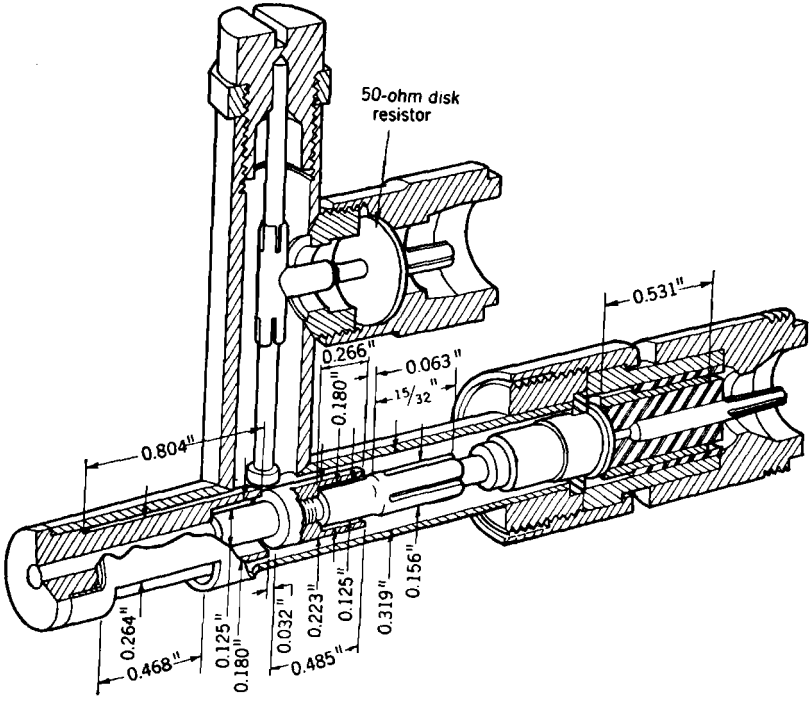

FIG. 3·44.—Iris-coupled mixer for 1N21B crystals in 8.0-to-8.8-cm band with TR cavity shown in Fig. 3·45 (24–179).

after the addition of the sleeve because of the effect of the sleeve on the admittance presented by the crystal at the iris.

Figure 3·40 shows a qualitative picture of the result of an experiment that was done in connection with the measurement of the variation of i-f admittance with frequency. Here many effects are obvious at one time. The TR cavity, determining the most sensitive signal frequency, was fixed at a frequency at about the middle of the chart. The i-f admittance was then measured as the local-oscillator frequency was varied. The main effect observed is a variation of conductance in an approximately sinusoidal fashion, except in the region of the two fre-

quencies that differ from the resonant frequency of the TR cavity by just the intermediate frequency. In the example shown, these frequencies occur near minimum conductance, and the conductance rises about half way to the mean value at each of these frequencies. Associated with

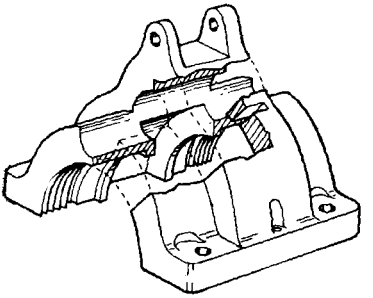

FIG. 3·45.—Cavity for 1B27 TR tube for 8.0-to-8.8-cm band and iris-coupled mixer. The cavity is 1.400 in. ID and the mixer center line is 0.783 in. from the cavity center.

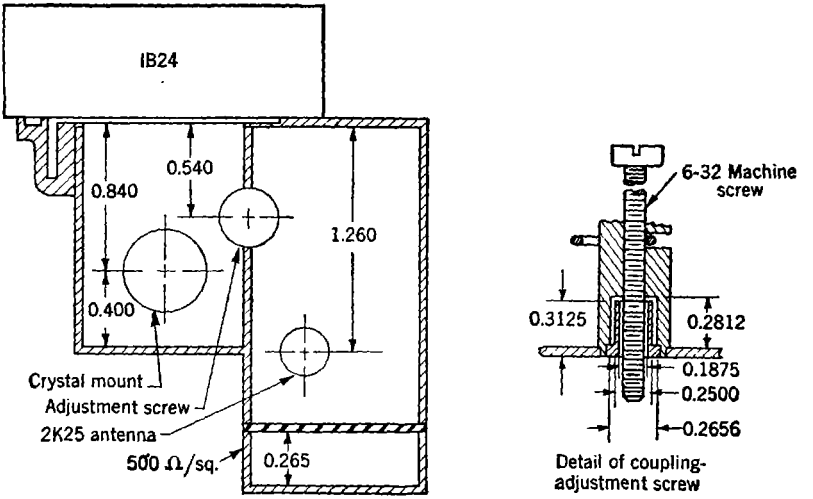

FIG. 3·46.—A cross-sectional view of the mixer, shown in Fig. 3·30 (24–126), for the 12 per cent band centered at 3.33 cm, for use with 1N23A or 1N23B crystal, 1B24 TR tube, and 2K25 or 723 A/B local oscillator.

each is an excursion of the susceptance and its value passes through zero in the opposite sense at each of the two frequencies. These two frequencies are, of course, the two frequencies at which the local oscillator could be set to obtain a receiver tuned to the frequency of the TR cavity, and the line length and frequency of the TR cavity correspond to mini-

mum conductance variation and maximum susceptance variation with frequency. Outside these two regions the susceptance is approximately zero because of the compensating effect of the reflection by the TR cavity of both sidebands. The susceptance component appears when one of the two sidebands is not completely reflected to the crystal by the TR cavity. The excursion of the conductance is about twice what it would

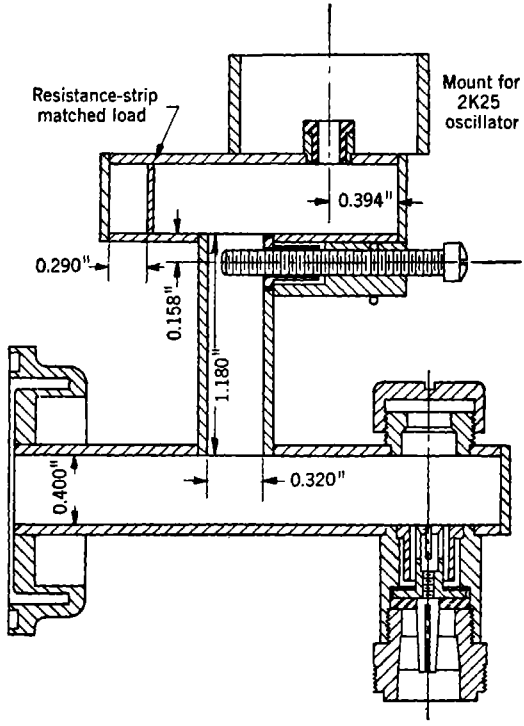

FIG. 3·47.—Cross-sectional view of mixer for 3.2 cm, with channel for LO coupling. This mixer is used with 1N23A and 1N23B crystals, no TR cavity, and 2K25 LO tube in the 70-volt mode.

be if the TR cavity were kept at a frequency differing from that of the local oscillator by the intermediate frequency and the two were tuned together. This figure is given only as a sample of the possible variation of the i-f admittance. The effects for various line lengths can be estimated with the aid of the linear network representation of the mixer and an admittance chart.

3·20. The Completed Mixer.—There follows a set of drawings, Figs. 3·41 to 3·52 inclusive, giving important dimensions of each of

several mixers representing applications of the foregoing circuits. On each drawing is indicated the type of crystals and the wavelength band for which it is intended. Those units intended for use in conjunction with a TR cavity and those which operate directly from a wideband antenna are identified. For the iris-coupled 8.5-cm mixer, the position

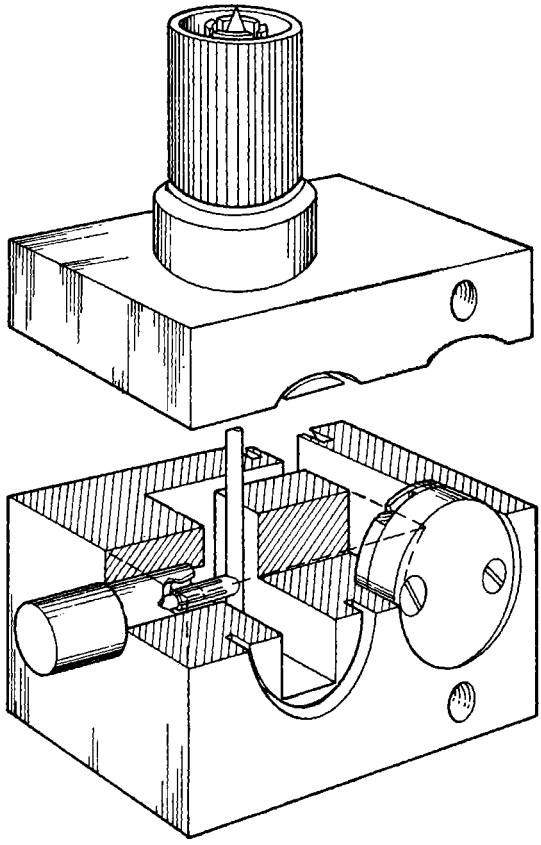

FIG. 3·48.—Mixer for use in the 1.23-to-1.27-cm band. This mixer is used with the 1B26 TR tube, 1N26 crystals, and 2K33 or 2K50 LO tube.

of the iris in the TR cavity is an important detail, since it determines the tuning condition. A separate drawing of the part of the TR cavity for a 1B27 tube in which the mixer is to be mounted is included among the drawings.

A drawing has also been included of a tunable resonant mixer known as a "pot" mixer. This is the only available example of a resonant

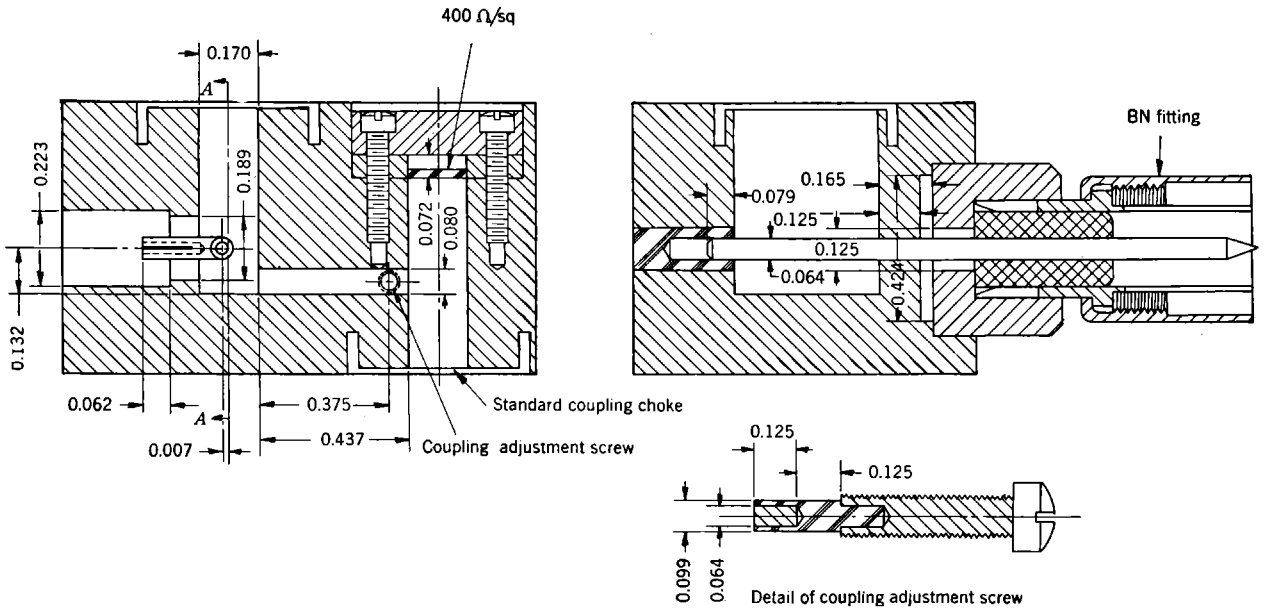

FIG. 3·49.—Cross-sectional view of the mixer of Fig. 3·48 (24–181).

mixer. It was used in very early radar systems but was soon discarded in favor of the simpler fixed-tuned mixers. The resonant feature is

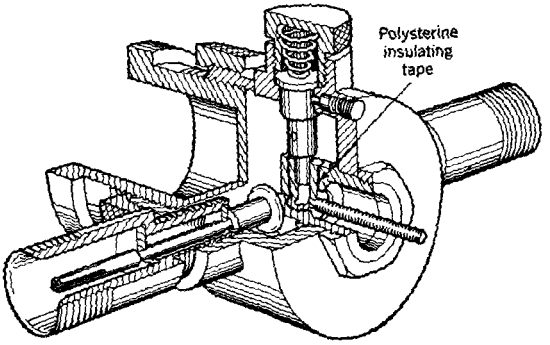

FIG. 3·50.—Tunable resonant mixer for 10-cm band.

unnecessary in a radar system since it already includes a cavity filter in the form of the TR cavity. The tuning procedure with a tunable TR cavity and a tunable mixer is very complicated, because these two

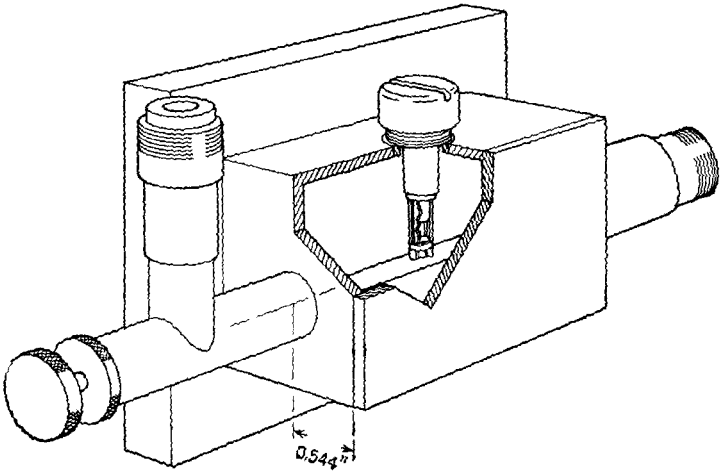

FIG. 3·51.—Waveguide mixer for ±4 per cent band centered at 10.7 cm; for use with 1N21B crystals, 2K28 LO tube. A resonant TR tube is not required.

devices cannot be tuned independently. A tunable resonant mixer may be useful in other applications, however, and for this reason the drawing has been included.

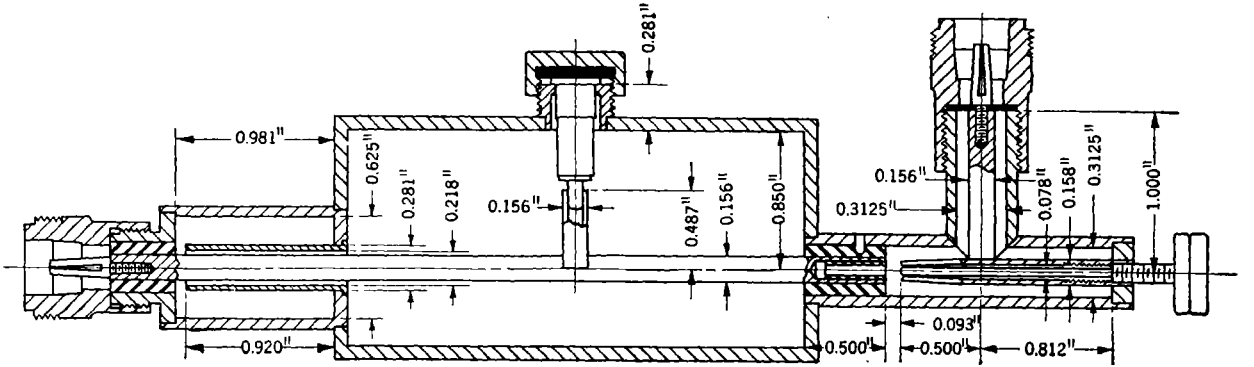

FIG. 3·52.—Cross-sectional view of the mixer of Fig. 3·51 (24–178).

CHAPTER 4

MULTIPLE-FUNCTION MIXERS

It is often desirable to have, in a radar system, a mixer that serves several purposes in addition to the principal one of converting the received reflected signal of the transmitter into the intermediate frequency. Some of these functions are peculiar to radar systems and their operational applications and are of little interest to the designer of mixers for other purposes. Since, however, a very large part of the task of mixer design has been concerned with the problems associated with these multiple-function mixers, and since it is probable that similar needs will exist in many future mixers, a description of these problems and their solutions will be given in this chapter. As is true for the simple mixer, there is no unique solution to a given design problem. The material given can only serve to show what has been done and to point out some of the relative merits of various solutions.

BEACONS AND AUTOMATIC FREQUENCY CONTROL

4·1. The Beacon Problem.—An example of the kind of device described by the term "multiple function mixer," is the mixer with the beacon feature for airborne radar systems. In conjunction with the use of radar as a navigational aid, a system of coded-pulse beacons has been set up. A switch in the airborne radar changes the system from a radar system to a system which sends out pulses of the proper characteristics to trigger a response from a beacon transmitter. The beacon response comes back to the airborne radar after a time determined, in the same way as for a radar echo, by the distance to the beacon, and at an azimuth that shows the direction of the beacon with respect to the heading of the airplane. The beacon feature requires of the receiver the same general things as does the radar system, except that the beacon frequency is usually different from that of the radar transmitter. For instance, most airborne radars for the 3-cm band operate anywhere in a frequency band from 9320 to 9430 Mc/sec, the precise frequency depending upon the particular transmitter tube used. The beacon receiver responds to this whole band of frequencies but its transmitter replies at 9310 Mc/sec—outside the band—to reduce confusion between echoes and beacon signals. Thus it is required that the switch that turns on the beacon feature change the tuning of the receiver from the local transmitter frequency to

9310 Mc/sec. A similar arrangement is used in airborne radar for the 9-cm band.

To accomplish the change in receiver frequency, it is necessary to alter the local-oscillator frequency. In the 9-cm systems that have 2K28 local-oscillator tubes with external cavities this is accomplished through the use of a switch-actuated solenoid that changes the position of a tuning plug in the cavity by the correct amount. When the system is correctly tuned, the limiting positions of this plug are so adjusted that the local oscillator is at the right frequency to receive the radar signal at one limit and the beacon signal at the other. To minimize the amount of tuning required of the plug, the local oscillator can be operated on the low-frequency side of the transmitter frequency and on the high-frequency side of the beacon frequency, if the beacon is just outside the band on the low-frequency side. With this choice of sidebands, however, there is danger of interference between the beacon and the radars at the low-frequency end of the band because, if the local oscillator is tuned for beacon reception, the image frequency of the receiver is in the radar band. Because of the danger of such confusion it was at first considered necessary to tune the local oscillator to the low-frequency side of the beacon. The difficulty of making a tuning plug that would give such a large range was, however, very great.

With tubes of the 723A/B, 2K25, and 726 types, in which the cavity is an integral part of the tube, a tuning plug cannot be used. In radar sets in which these tubes are used—notably the 3.2-cm airborne systems—two separate local-oscillator tubes and coupling circuits are therefore provided for each mixer. The tubes are tuned, respectively, to the proper frequencies to receive echoes or beacon signals, and the radar-to-beacon switch turns one off and the other on. One of these oscillators is called the radar LO and the other the beacon LO. When the 723A tube was coupled to the mixer by the insertion of its antenna an adjustable amount into the mixer waveguide, an odd number of quarter wavelengths away from the effective position of the TR cavity, the provision for the beacon feature could be made easily. All that was necessary was to drill another hole in the same side of the waveguide or in the opposite side and use a second adjustable tube mount. Since the oscillators did not operate well in this kind of coupling circuit, and because provision for radar and beacon automatic frequency control (AFC) demanded more complex arrangements, such mixers are completely obsolete. Instead, the coupling circuits described in Chap. 3 have become more extensively applied.

4·2. Single-channel Automatic Frequency Control.—One major source of loss of performance of a radar system is the mistuning of the receiver resulting in a less-than-maximum sensitivity to echo signals.

As shown in Chap. 1, the requirement of frequency stability of the local oscillator in the superheterodyne receiver is very stringent. It has consequently been found almost impossible to obtain as good results from a radar system in which the local oscillator is tuned manually as from one in which it is tuned automatically. As a consequence, all recent radar systems include automatic frequency control of the local oscillator. This not only removes the frequency-stability requirement from the local oscillator but ensures that the oscillator will maintain the i-f difference from the transmitter frequency, even if the transmitter drifts. A detailed discussion of the various electronic control circuits is given in Chap. 7, and it is the task of the present section to present the details of the special microwave components that are used in conjunction with these circuits.

The simplest AFC circuit is one which branches from the i-f amplifier after two or three stages of amplification, where such a branch has a negligible effect on the receiver noise figure. Since the TR cavity does not give complete elimination of the transmitted signal, an i-f beat is produced between the local oscillator and the leakage signal from the TR cavity. This beat-frequency can be used to actuate the frequency-control circuits. A circuit of this type was used in some of the first radar sets having AFC but it has never been found satisfactory for field-operated sets. There are several possible reasons for this, no one of which has been isolated as the prime source of trouble and eliminated. They all stem from the facts that it is impossible to control the power level of the leakage signal from the TR cavity, and that this leakage signal does not necessarily have the same frequency spectrum as the main transmitter signal. The leakage signal has a power level, at the mixer crystal, at least 10 and sometimes 100 times the power level of the local oscillator. As a result, the mixer is operated at a level far above that for which it was designed. There is also the spike energy, of very large amplitude but short duration, which definitely gives the TR leakage signal a frequency spectrum different from that of the true transmitter pulse. In addition, spurious transmitter frequencies, which may include a very small fraction of the energy in the main pulse, may be transmitted through the fired TR switch to the mixer with the same amplitude as the main pulse and the AFC circuit may lock to such a signal instead of to the correct one.

Another argument against this simple kind of AFC is its susceptibility to interference signals. A signal, from an external source, just large enough to overload the mixer crystal would produce an i-f signal of about the same amplitude as produced by the transmitter. It is therefore conceivable that such a signal could compete for control of the local oscillator. Schemes involving the use of time-selective gates,

synchronized with the transmitter pulse, have been suggested to eliminate this difficulty by making the frequency-control circuit sensitive only during the period of transmission. Because of other difficulties involved in their use, however, gated systems have not been widely employed. The net conclusion drawn from experience with the simple AFC scheme is that a particular radar system with a given set of components—transmitter tube, local-oscillator tube, TR tube and crystal—can be adjusted so that it will operate satisfactorily, but that the adjustment is not permanent and the system requires frequent readjustment to remain operative. A change of any one of the components involved may require readjustments of the circuit to eliminate spurious output voltages from the control circuit. The device, therefore, does not stand up well under field conditions.

4·3. Separate-mixer AFC.—As an alternative to the use of the AFC system just described a completely separate mixer may be provided for the AFC circuit. The input signal is derived from the main transmitter signal by way of a path having high attenuation but containing no nonlinear elements. The input signal obtained in this way has amplitude and frequency characteristics that are identical with those of the transmitted pulse. The local oscillator must be the same one that is used for the radar mixer, since it is the frequency of this oscillator that must be controlled. The AFC circuit following the mixer is thus completely separate from the receiver circuit and can therefore have different bandpass characteristics if necessary. All the objections to the single-channel system are eliminated by this scheme, provided that signals from the TR switch in the radar mixer do not leak by way of the local-oscillator path, into the AFC mixer. Under this condition, the amplitude of the transmitter signal in the mixer can be set at the most desirable level by choice of the attenuation used. The danger of losing control to a jamming signal is eliminated because any signal in the main line of the system suffers the same attenuation as does the transmitter signal. A jamming signal, to cause any trouble, would have to be of about the same strength as that of the local-transmitter signal, which is obviously impossible.

The major problem of the separate-channel-AFC system is to operate two similar mixers from a single local oscillator, with as large an attenuation as possible between the signal circuits of the two mixers by way of the local oscillator. In addition, the signal-coupling circuit for the AFC mixer must be designed to give the required signal level over whatever frequency band is to be used. With regard to the problem of local-oscillator coupling, it is immediately apparent that the branching to the two circuits must occur on the local-oscillator side of the mixer-to-LO coupling circuits, since then a signal leaking from one mixer to the other must

suffer the coupling attenuation twice. The percentage of leakage signal reaching the local-oscillator circuit is the same as the percentage of the available LO power coupled to the crystal. From the local-oscillator circuit to the second mixer, the leakage signal suffers the same attenuation as does the LO power. Thus it is advantageous to have a local oscillator with a large available power, coupled to the crystal through a large amount of attenuation.

In the 10-cm region where coaxial-line mixers are used, coupled to the local oscillator by means of cables, the double-mixer scheme is provided through the use of two simple mixers connected by separate cables to separate pickup loops in the local-oscillator cavity. Each of the loops is tightly coupled to the cavity so that sufficient power is incident in the

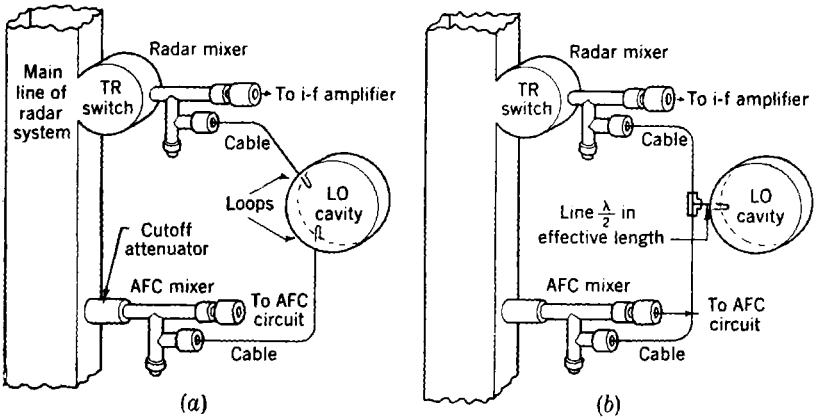

FIG. 4·1.—Block diagram of r-f circuit for separate-channel radar and AFC coaxial line mixers. (*a*) Double-loop LO coupling; (*b*) single-loop LO coupling.

LO injection circuit of each mixer to allow reasonably weak coupling. The attenuation between the two signal circuits, known as the "cross" attenuation, is increased because the signal must travel between the loops in the oscillator cavity. Since the cavity is resonant at the local-oscillator frequency, which differs from the signal frequency by the intermediate frequency, there is some reflection of the signal and a consequent increase in cross attenuation. If oscillator tubes having only a single output line (such as tubes of the 726 type), are used, the two mixers must be connected by a branched line or T-junction. The effect of the detuned local oscillator can be obtained through the choice of the line length between the local oscillator and the T-junction. If this length is so chosen that the line into the local oscillator acts as a short-circuiting stub when the local oscillator is detuned, the maximum attenuation is obtained. With tubes such as those of the 726 type,

the proper length of this line varies greatly with frequency because of the relatively long line included in the tube. Consequently, the amount of attenuation gained over a frequency band of several per cent is small and perhaps not worth the effort of determining the best line length. Single-loop T-junctions have been used with cavity oscillators such as the 2K28. For these oscillators the effective stub-line length can be made only one-half wavelength and the attenuation gained is therefore large. A block diagram illustrating these two connections is given in Fig. 4·1*a* and *b*. Figure 4·2 shows the added cross attenuation due to reflection at the T-junction as a function of frequency. It has been assumed here that the admittance of the stub line ending in the loop has the frequency dependence of a half-wavelength short-circuited line, and that the local-oscillator cavity is completely nonresonant at the signal frequency. The reflection coefficient for a wave traveling toward the cavity in this line is therefore unity. The line is made to be resonant at the midband wavelength, and the curve shows the reflection loss as a function of the ratio of the actual signal frequency to this midband frequency. In practice, somewhat less attenuation than this will be achieved, especially near resonance. For a longer line, such as would result with a tube of the 726 type, the frequency scale may be changed by the appropriate factor.

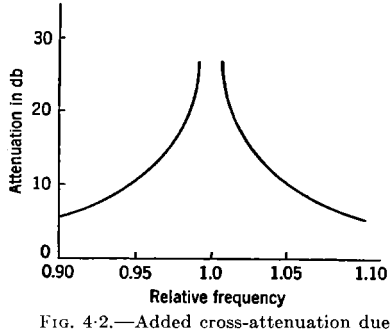

FIG. 4·2.—Added cross-attenuation due to reflection at T-junction vs. relative frequency, with half-wavelength line between the T-junction and the local-oscillator cavity.

It is important, when trying to supply two mixers with local-oscillator power from a single oscillator, that the standing-wave ratio in the local-oscillator cables be small. This can be accomplished through the use of attenuating cables or by means of the resistor-disk terminations in the local-oscillator circuits of the mixers, as described in Chap. 3. The splitting of the power between the two circuits at the T-junction is determined by the admittances which appear in parallel. If a large standing-wave ratio existed in the lines between the mixers and junction, a large conductance could result for one line and a small one for the other, with the result that one mixer would receive almost all of the available local-oscillator power, and the other almost none. With a situation giving equal splitting of the power, about 20 mw of power may be sent to each mixer. Since each crystal requires about 0.5 mw of local-oscillator drive, the attenuation between the mixer circuit and the local-oscillator circuit is about 16 db. Thus the cross attenuation, neglecting

the contribution of the power-splitting circuit, is about 32 db. If the amount of TR leakage power is 50 mw, the signal that it produces in the AFC mixer is, therefore, reduced to about 0.03 mw. Since the AFC signal is set at about 2 mw, it exceeds the spurious signal from the TR switch by at least 18 db. A larger safety factor than this is to be desired, and the additional attenuation by the LO cavity or by the T-junction is helpful.

4·4. The Coupling of the Transmitter Sample.—The sample of transmitted power that constitutes the signal in the AFC mixer is usually coupled through a "cutoff" attenuator to the mixer. This consists of a circular pipe of too small a diameter to allow unattenuated propagation of the wave in question. The coupling of this attenuator to the main transmitter waveguide or coaxial line is accomplished by means of a hole in the wall of that line; the coupling to the mixer is done by the conventional loop or iris. The action of the cutoff attenuator may be analyzed in the following way. The wave traveling along any waveguide is described by the relation

$$E = E_0 e^{-j(\omega t - kx)},$$

where ω is 2π times the frequency, E is the amplitude at the point x and at the time t and E_0 is the maximum amplitude. The quantity k is the wave number and is equal to $2\pi/\lambda_g$, where λ_g is the wavelength in the waveguide. This is

$$k = \frac{2\pi}{\lambda_c}\sqrt{\left(\frac{\lambda_c}{\lambda_0}\right)^2 - 1},$$

where λ_c is the cutoff wavelength of the waveguide and λ_0 is the free-space wavelength of the wave in question. Thus, the wave is described by

$$E = E_0 e^{j\left[\frac{2\pi}{\lambda_c}\sqrt{\left(\frac{\lambda_c}{\lambda_0}\right)^2 - 1}\right]x} \tag{1}$$

times the term in the time. For wavelengths longer than the cutoff wavelength, the quantity in the radical is negative and the wave does not propagate in the ordinary sense. Equation (1) can then be written in the form

$$E = E_0 e^{-\left[\frac{2\pi}{\lambda_c}\sqrt{1 - \left(\frac{\lambda_c}{\lambda_0}\right)^2}\right]x},$$

showing that an exponential decrease in amplitude occurs for a wavelength longer than the cutoff value. The ratio E_0^2/E^2 is the power attenuation between points that are x centimeters apart in the waveguide, if λ_c is expressed in centimeters. Written in decibels, this attenuation is

$$A = \frac{40\pi}{\lambda_c}\log_{10} e\sqrt{1 - \left(\frac{\lambda_c}{\lambda_0}\right)^2}\, x$$

$$= \frac{54.5}{\lambda_c}\sqrt{1 - \left(\frac{\lambda_c}{\lambda_0}\right)^2}\, x.$$

For a guide of circular cross section, the cutoff wavelength of the lowest mode is 1.71 times the diameter. Thus

$$A = \frac{31.9}{d}\sqrt{1 - 2.92\left(\frac{d}{\lambda_0}\right)^2}\,x. \tag{2}$$

If the diameter is small compared with the wavelength, the attenuation is independent of the wavelength. This is a desirable property for an AFC mixer that is to be used over a wide band. For diameters this small, the attenuation is just 31.9 db per diameter.

The amount of attenuation needed is the ratio of the transmitted power to the signal level desired in the mixer. For a 500-kw system and 2 mw in the mixer this is 2.5×10^8, or 84 db. It is not possible to use an attenuator pipe giving 84 db in its length, however, because the coupling factors between the main waveguide and the attenuator and between the attenuator and the loop of the mixer must be taken into account. For this reason the attenuator should be designed for an attenuation about 30 db less than the total, to allow a large decoupling factor, so that the reflection of the main signal in the transmitter line of the system will be small. It is difficult to calculate the end effects and the final design of the attenuator is best found experimentally. One tentative unit can be built and tested and then corrected, by means of Eq. (2), to give the right power level at the mixer crystal.

A serious shortcoming of the cutoff attenuator in this application is that it has no attenuation at wavelengths shorter than its cutoff wavelength. In a particular example a cutoff attenuator was used that did not transmit frequencies as high as the sixth harmonic but transmitted the seventh and higher. It was found that trouble with the AFC circuit was attributable to the presence of signals in this high-frequency range in the mixer. The system operated at 10 cm but a large signal could be detected in a crystal mounted in a 1.25-cm waveguide (0.170 by 0.420 in. ID) of sufficient length to attenuate the 10-cm signal to a negligible level when that waveguide was held in the position of the AFC mixer at the output iris of the cutoff attenuator. It might be argued that an attenuator of smaller diameter would be the solution, but just how much smaller it would have to be would be a difficult question. It was thought better to add to the cutoff attenuator a device that would have increasing attenuation with increasing frequency. A satisfactory device of this kind was found in the form of a sheet of carbon-coated Bakelite resistance card of 500 ohms per square. The card was cut into a rectangle of a width equal to the diameter of the attenuator and a length about a quarter-inch less than the distance from the waveguide end of the attenuator to the loop of the mixer. When this sheet was inserted into the attenuator so that its plane was in the plane of the electric field vector in the attenuator, the high-frequency transmission was reduced well below the point of

being troublesome. The attenuation of the power at the fundamental frequency was affected very little and the specific resistance of the strip was found to be of little importance to its efficiency in attenuating the high-frequency components. All attenuators subsequently designed contained dissipative attenuators as a precaution against trouble with high frequencies. For the 3-cm band a short cylinder of polyiron, inserted into the attenuator, is found to be more effective than the resistive sheet. At 1.25 cm, a matched polyiron attenuator in the mixer waveguide is used in addition to the cutoff attenuator. This polyiron attenuator is designed to give an attenuation of 20 db at the fundamental frequency. It is used also to reduce the leakage of transmitter signal into the AFC mixer at the joint between the cutoff attenuator and the mixer

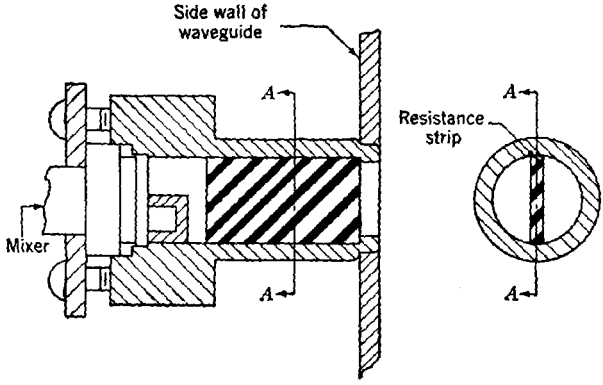

FIG. 4·3.—Coupling attenuator for AFC, used in 10-cm, 500- to 1000-kw waveguide systems.

waveguide. Because the polyiron pad is matched into the waveguide from both directions, it also provides a matched generator for the AFC signal at the mixer crystal. The direct use of the cutoff attenuator, on the other hand, provides essentially a constant-voltage generator, with the result that the power level at the mixer crystal is strongly dependent on the crystal admittance. The matched resistive attenuator, however, cannot be used with a mixer having an LO coupling circuit that requires reflection of the local-oscillator wave that travels toward the signal line. Mixers intended for use with a narrow-band TR switch, therefore, cannot be used with such an attenuator.

Figure 4·3 shows an attenuator used to derive the AFC signal in a 10-cm, 500-kw waveguide system. The attenuator can be coupled on either the wide or the narrow side of the waveguide, but on the wide side it must be in the center. A loop-coupled mixer (see Fig. 3·40) is mounted on the other end of the attenuator and the plane of the loop is

the same as the plane of the resistance strip and the electric field vector in the attenuator.

4·5. Two-channel Mixers for All-waveguide Systems.—In the 1.25-cm and the 3.13- to 3.53-cm bands, where the local oscillator must be coupled to the mixer through waveguide, the two-channel mixer is made in a single unit. By means of the coupling circuit of the channel or iris type described in Sec. 3·5, one mixer is coupled on each side of the local-oscillator waveguide. Figures 4·4 and 4·5 show the most commonly used mixers employing these principles in the two bands mentioned. All indicated dimensions are equivalent electrical lengths and must be corrected for end effects, as discussed in the preceding chapter. The entire 1.25-cm mixer, including the coupling chokes, is machined from a solid brass block. Figure 4·5 shows the 20-db polyiron attenuator just

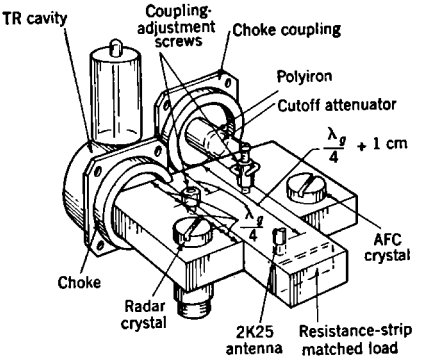

FIG. 4·4.—Two-channel mixer for use in the 3.3-cm wavelength band.

described, in place in the AFC mixer. The coupling to the main waveguide is through a small hole in the wall at the end of the waveguide running from the main guide to the mixer, and the size of the hole is chosen to give the required total attenuation between the transmitter and the AFC mixer crystal.

Because it would be very difficult to make the duplexer and mixer to such close tolerances that both the radar mixer and the AFC mixer could be rigidly connected to the duplexer, these two pieces have been so designed that one limit of the tolerances brings both channels into contact with their corresponding members on the duplexer and the other limit leaves a gap on the AFC side. The only danger this entails is that of leakage of signal into the AFC mixer from the outside. As has been mentioned, the dissipative attenuator in the 1.25-cm mixer reduces that danger. In the 3.3-cm mixer, this difficulty is eliminated by the inclusion of the cutoff attenuator as a part of the mixer rather than as a part of the duplexer.

In both these mixers a resistance strip is used as a matched load in the local-oscillator waveguide. This strip has an effect analogous to that of the resistor disk used in the coaxial-line mixers. It has a conductance equal to the characteristic admittance of the waveguide plus a capacitive susceptance due to the dielectric constant of the Bakelite base. This susceptance is resonated out by short-circuiting the waveguide less than a quarter wavelength behind the strip. The specific

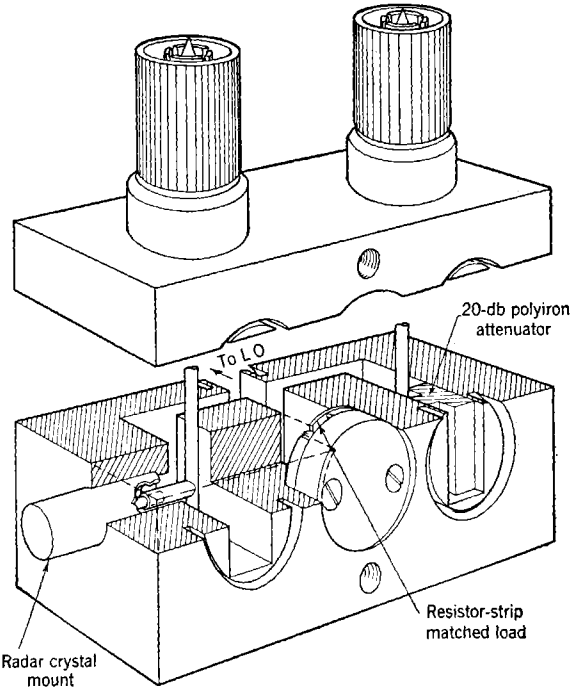

FIG. 4·5.—Perspective view of 1.25-cm two-channel mixer, opened to show inside.

resistance used at 3.3 cm is 500 ohms per square and the distance from the back of the strip to the end wall is 0.265 in. In the 1.25-cm waveguide a 400-ohm-per-square material and a distance of 0.048 in. gives the best match. These terminations are very compact and simple to construct, and give a degree of match and a bandwidth adequate for the purposes used here. The voltage standing-wave ratio obtained in this way is less than 1.10 at midband and remains under 1.4 over a band of plus or minus 5 per cent.

The reflection produced in the local-oscillator waveguide by the two coupling devices is more serious than that produced by one. In the

3.3-cm example the coupling iris on one side has been operated with a fixed post so that it is beyond resonance with the adjustment screw removed, as has been discussed in Sec. 3·5. With the other iris operated as an inductive susceptance, the reflections from the two irises tend to compensate each other. In the 1.25-cm example no serious trouble was caused by the reflections by the coupling channels, but the reflection could be reduced, if necessary, by placing the two channels a quarter wavelength apart on the local-oscillator waveguide. This would require, however, that the mixer be asymmetrical. The coupling channels used at 1.25 cm are different from those discussed in Sec. 3·5 in that they are connected to the mixer waveguide behind the crystals. An equivalent network for this junction has been worked out by Schwinger's method and may be found in Vol. 10 of this series. Coupling of this type gives less freedom than the symmetrical couplers between the crystal and the TR cavity because the spacing between the crystal and the TR cavity must be so chosen that the reflection of the local-oscillator wave by the TR cavity does not produce a voltage node at the position of the crossbar transition to the crystal.

All the other details of the mixers, such as the crystal mounts, the methods of bringing out the beat frequency, and the method of adjusting the local-oscillator coupling have been discussed in Chap. 3. More detailed dimensional drawings of these mixers will be found in the group of drawings at the end of the present chapter. The cross attenuation achieved with these mixers is determined, as in the 10-cm example, by the available local-oscillator power and, in decibels, is about twice the attenuation between the local oscillator and a single crystal. Measurement on the 3.3-cm mixer with a 2K25 local-oscillator tube shows that a cross attenuation of at least 30 db can be obtained at all wavelengths in the 3.13- to 3.53-cm band.

4·6. A Mixer Employing Directional Couplers.—A mixer with greater cross attenuation, if needed, could be made using the directional-coupler principle. A sketch of a mixer of this kind is shown in Fig. 4·6. The TR leakage power that reaches the local-oscillator waveguide travels toward the dummy load, and only that which is reflected by the load passes the directional coupler that leads to the AFC mixer. The TR leakage power that is coupled into the AFC mixer, therefore, travels toward the AFC attenuator and, since a matched dissipative attenuator is used, none of this power arrives at the AFC crystal. There is a reflection of TR leakage power by the radar mixer crystal and some of this is coupled into the AFC mixer waveguide, but this also travels toward the attenuator and not toward the crystal. The only coupling between the TR leakage signal and the AFC mixer crystal is by reflection of the wave reflected by the radar crystal from the local-oscillator attenuator.

Since the local-oscillator attenuator must have a small attenuation (only sufficient to give the required adjustment range) the reflection may be large. Thus, the cross attenuation is the attenuation of the two directional couplers plus an amount dependent on the reflection coefficient of the mixer crystal at the level of the TR leakage power and on the reflection coefficient of the local oscillator and attenuator. No mixers of this type have been used because the simpler ones seem to have sufficient cross attenuation with most oscillator tubes. This mixer would be difficult to fit into the space available in the usual duplexing system. A

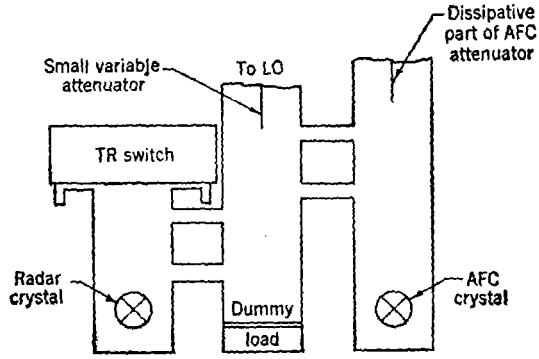

FIG. 4·6.—Two-channel mixer with directional coupler, for large cross attenuation.

much better two-channel mixer, which can be used with a local oscillator of limited output power, will be described in Chap. 6.

LOAD-DEPENDENT PROPERTIES OF OSCILLATORS

In all of the mixer designs so far presented, provision has been made for a very definite kind of load admittance at the local-oscillator tube. Before proceeding with the discussion of multiple-function mixers, the behavior of local oscillators, as a function of the load admittance presented to them, will be qualitatively described. From this discussion it should become evident that the provision of a definite load admittance for the local oscillator is a very important part of the design of a microwave mixer. Previous to the general recognition of this fact, many mixers were designed without such provisions (the coupling obtained by varying the antenna insertion of the 723A/B tube is an example), and their operation in field radar systems was anything but trouble-free. For the separate beacon local oscillator in one mixer, for example, a special selection of oscillator tubes was required, since only a small percentage of otherwise perfect tubes would operate properly in the circuit. The property of the tube which governed its proper operation in the circuit was not included in the tube specifications. It was there-

fore possible to design a circuit in which all tubes of a given type would operate at the time of the circuit design, but in which later samples of the same type of tube might be unsatisfactory.

4·7. The Rieke Diagram.—In order to decide upon an output load for any kind of self-excited oscillator, it is helpful to plot a "Rieke diagram" of the tube. This is done by measuring the oscillator power and frequency as a function of the load admittance presented at some point in the output circuit of the oscillator. A plot of these data, in the form of contours of constant power and contours of constant frequency, on a Smith admittance diagram is called the Rieke diagram for the tube.

Suppose that the oscillator may be represented as the shunt-tuned tank circuit of Fig. 4·7. For a simple reflex klystron, this tank circuit is the cavity resonator of the oscillator. The voltage built up across the resonator is not independent of the load admittance. From this representation, however, it is obvious that the power delivered to the load must depend upon the conductance of the load and must go to zero if that conductance goes to zero, because of the presence of the shunt conductance g_s resulting from resistive losses of the cavity. If the load conductance increases unduly, the oscillator may become overloaded to such an extent that the power circulating in the tank circuit is insufficient to maintain the oscillation through the feedback circuit and the oscillations cease. Thus, there must be a load conductance that gives a maximum of power delivered.

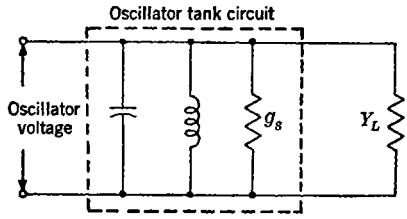

FIG. 4·7.—Circuit representing oscillator tank circuit and load admittance.

The susceptance component of the load admittance, on the other hand, adds to the susceptance of the tank circuit. If the susceptance of the load varies slowly with frequency, a change in its value causes the oscillator frequency to change until the tank circuit contributes a susceptance that cancels the load susceptance. This is because the feedback efficiency is greatest at the frequency of zero total susceptance, and the voltage built up across the tank circuit is therefore largest at this frequency. It is now apparent that plots of contours of constant delivered power and contours of constant frequency against the load admittance, as measured in the tank circuit, would resemble Fig. 4·8. The contours of constant power are circles of constant conductance and the contours of constant frequency are the circles of constant susceptance. The amount of frequency change per unit susceptance depends upon the Q of the resonant cavity of the oscillator. The "pulling figure" for the tube—

that is, the maximum frequency change when a load admittance causing a voltage standing-wave ratio of 1.5 is varied through all phases—is closely related to the Q of the resonator. These relationships are not the subjects of the present discussion; for a detailed discussion of the Rieke diagram, the reader is referred to Vol. 7 of this series. The important region for the present purposes is the circular region of the diagram, called the "sink," in which the oscillator does not operate at all. Load admittances that fall in this region must be avoided if the oscillator is to be expected to operate.

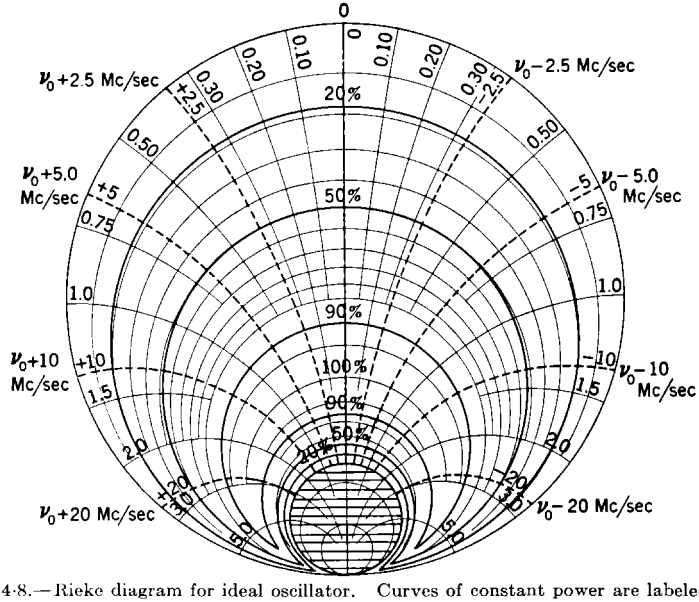

FIG. 4·8.—Rieke diagram for ideal oscillator. Curves of constant power are labeled with percentages of maximum power available.

The discussion so far has been concerned with the load admittance as measured at the tube itself. In practice there is some kind of output coupling circuit and, therefore, the admittances that can actually be measured are those at some point in the output line. Since the electrical distance between this point and a reference point within the tube varies with frequency, the actual Rieke diagram is a distorted version of that shown in Fig. 4·8. The fact that the coupling circuit cannot be completely nondissipative limits the range of admittances presented to the tube when the whole complex plane is covered at the point of measurement. As a result, the contours of constant power do not follow the constant-conductance circles and do not close in the regions of large susceptance. Moreover, the region of the sink does not remain circular.

The contours of constant frequency are no longer the circles of constant susceptance, but qualitatively they retain the property of being orthogonal to the contours of constant power. An actual Rieke diagram for a 2K25 oscillator is shown in Fig. 4·9. The admittance plotted is that measured in the waveguide of a standard test mount, at the plane of the antenna of the 2K25.

The Rieke diagram for the 2K25 oscillator changes rapidly with the "matched load" frequency of the tube. This change can be accounted for by the relatively long length of the output coupling line between the tube cavity and the point in the waveguide at which the admittances are

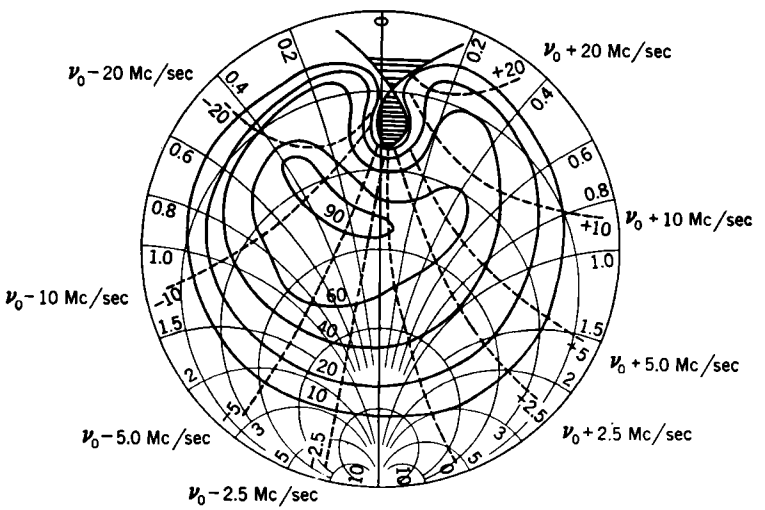

FIG. 4·9.—Rieke diagram for a 2K25 oscillator.

measured. The electrical length of this line varies with wavelength and, as a result, the Rieke diagram rotates on the admittance chart as the wavelength is altered. If a matched load on the waveguide does not result in unity standing-wave ratio in the coaxial output line there is also a radial shift of the diagram with wavelength. Two things become apparent from this consideration. First, a given load admittance must not be crossed by the sink for any wavelength in the band to be used. Second, if the rotation encountered over the band becomes as much as one-half wavelength, the only safe region for the load admittance is very near the center of the diagram, provided there is not excessive translation of the diagram with wavelength. The specification test of the 2K25 ensures that the sink does not overlap the portion of the diagram which represents the matched-load condition of the mount when the tube is operated in a mount identical with the test mount, because the

tube must operate continuously in this mount from one end of its tuning range to the other. Thus, it is evident that the only load admittance that is safe to use in mixer design is that presented by the test mount.

When the output coupling circuit is not a part of the oscillator tube, as is true for the 10-cm 2K28, the situation is different. For a given frequency the output coupling loop can be adjusted to give the required output power, up to the maximum power obtainable from the tube. If the loading is increased beyond the value for maximum power, the conductance may be in the region of the sink. If, however, the output line is several wavelengths long and there is a large standing-wave ratio in the line, the load admittance presented by a given output-loop adjustment changes rapidly with wavelength and a good adjustment at one wavelength may easily result in overload at an adjacent wavelength. This is a good argument for the resistor-disk matched load provided in the LO coupling circuit of the 10-cm coaxial-line mixers.

A more careful consideration of the Rieke diagram of the transmitting oscillator is necessary, since the pulling figure is of considerable significance. The output circuit is designed on the basis of a compromise between pulling figure and delivered power; hence, somewhat less than the maximum available power is obtained. For local-oscillator applications the pulling figure is not of the same importance, although it must be considered under some conditions.

It should be pointed out that the Rieke diagram of a reflex-klystron oscillator is not independent of the reflector mode in which the tube is operated. Usually the sink covers a larger region on the diagram as the reflector voltage is increased from one mode to the next. It is not sufficient, therefore, to provide a load circuit identical with the test mount unless the tube is to be operated in the same mode as that specified in the tests. Although it may often seem that somewhat greater output power is available in a mode of higher reflector voltage than in the one used in the tests, designing on this basis is not safe. At some frequencies the sink may enclose the matched-load point of the diagram for a higher-voltage mode and there will be no output power at these frequencies.

The presence of the overload condition at some frequency cannot always be discovered by merely tuning the tube through the frequency range and observing that power is obtained at all positions of the tuning mechanism. The tube may jump suddenly over the frequencies at which it cannot oscillate, if the frequency sensitivity of the load admittance is high. The tube may be more thoroughly tested for operation in a mixer by superimposing on the steady reflector voltage a sawtooth sweep voltage of sufficient amplitude to sweep the tube through the desired mode of oscillation. If the same voltage is applied to the horizontal deflection plates of a cathode-ray oscilloscope and if the vertical deflection

is made to show the rectified voltage of the mixer crystal, a plot of the oscillator output power vs. frequency results. A plot of such a presentation is shown as the solid curve in Fig. 4·10. As the tube is tuned, this mode pattern moves slowly along the voltage axis because the reflector voltage required to maintain oscillation changes, but it maintains substantially the same shape. It may, of course, grow larger or smaller, in the vertical direction, as the coupling factor for the LO coupling circuit changes with frequency. If, however, the overload condition occurs at some frequency, the curve becomes suddenly smaller as this frequency is approached and usually shows sharp drops at the sides, as shown by the dashed lines of Fig. 4·10. The evidence of oscillation may disappear altogether over a short range of the tuning mechanism and reappear as the tuning is continued, but with the pattern centered at a different voltage. Finally, the pattern will regain its original shape as

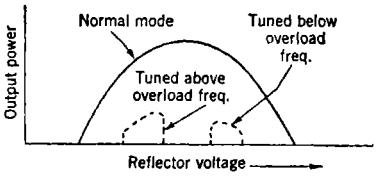

FIG. 4·10.—Output power vs. LO reflector voltage for normal and for overload conditions.

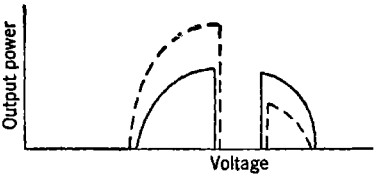

FIG. 4·11.—Overload condition, allowing oscillation at frequencies on both sides of a discontinuity, in a single mode.

the frequency becomes sufficiently removed from the critical frequency on the other side. In some cases the overload at a particular frequency appears over so narrow a frequency range as to allow oscillation on both sides of this range in a single reflector-voltage mode. Then the amplitude falls abruptly to zero over a small range of reflector voltage, as shown in Fig. 4·11. As the tube is tuned away from this region, the half of the mode that corresponds to frequencies on this side of the overloaded frequencies swells and finally becomes the full mode of the normally loaded oscillator. The other half disappears completely for a small tuning away from the symmetrical case. The beginning of this effect is indicated by the dashed curve of Fig. 4·11.

That the situation of a broken curve such as shown in Fig. 4·11 does correspond to a frequency jump can be confirmed through the use of a reaction wavemeter, coupled to the mixer in such a way that a dip in the crystal current occurs at resonance for the wavemeter. Since each point of the curves of rectified crystal voltage vs. reflector voltage corresponds to a different frequency, in accordance with the electronic tuning principle, a dip in the curve, which moves along as the wavemeter is tuned, results. In a situation such as that illustrated in Fig. 4·11, the wavemeter dip moves smoothly through one-half of the curve and then

disappears for a considerable range of frequency as the wavemeter is tuned. Finally, it reappears at the inside edge of the second part of the mode and moves smoothly on to the end of the mode. The region of frequency skipped is usually much greater than that covered by the ordinary electronic tuning for a change of reflector voltage equal to that of the blank region. This is understandable because the two sides of the sink of the Rieke diagram represent extreme values of frequency pulling in opposite directions.

A less noticeable but very serious kind of frequency discontinuity sometimes occurs if the load on the oscillator is highly frequency-sensitive. Such a load results with a 2K25 if the tube is tightly coupled to a waveguide in which a very large standing-wave ratio exists. In a situation of this kind, the test described in the preceding paragraph may show a normal oscillator mode at all tuning conditions, except for a small cusp which moves through the mode as the tube is tuned. This is shown in Fig. 4·12. The cusp is often so small that it can go unnoticed unless the observer is looking specifically for it. The cusp would almost certainly be regarded as of little consequence since it appears to be no more serious than a small drop in available power, similar to that produced by the reaction wavemeter. If, however, the wavemeter test is made, a continuous variation of frequency is found up to the cusp, and at this point the wavemeter indication disappears. Before the wavemeter indication reappears on the other side of the dip, the wavemeter may have to be tuned through 1 or 2 per cent, showing that there is a 1 or 2 per cent gap in the spectrum of available frequencies from the tube operating into this load. If the tube is mechanically tuned, the discontinuity moves in the mode, but the wavemeter test shows that substantially the same frequency band is always skipped with a particular tube.

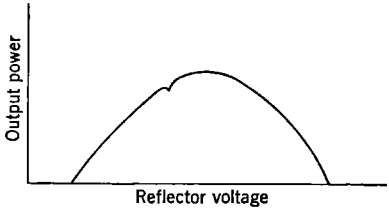

FIG. 4·12.—Oscillator-mode pattern, showing discontinuity.

This effect can also be explained as a result of the sink of the Rieke diagram, the difference being that the load circuit is sufficiently frequency-sensitive to allow the tube to find a frequency at which it can oscillate at any tuning condition. As the frequency of the tube approaches the frequency at which the load is in the overload region it simply jumps across to a frequency on the other side of the sink. This change in frequency alters both the position of the sink on the Rieke diagram and the admittance presented by the load.

Attempts were made to use the 723A/B tube in a double-mixer circuit in which the oscillator was coupled directly into a resonant

cavity. The load presented to the antenna of the tube by the resonant cavity was very frequency-sensitive and was far from the center of the Rieke diagram of the tube. For any tube a frequency discontinuity of this type could be found but the frequency region skipped varied considerably from tube to tube, corresponding to a variation, among tubes, of the electrical length of the coaxial output line. Thus, a measurement of the Rieke diagram of these tubes would show a considerable variation in the position of the sink. To make a mixer that would operate with any tube, in even a narrow band of frequencies, it was found necessary to make the discontinuity caused by the resonator circuit fall at a frequency several per cent outside the band, for an average tube. As a result the load condition on the average tube was such that only a small amount of energy was stored in the resonator. The coupling required between the resonator and the mixer to give sufficient power at the crystal resulted in a large reaction of the local-oscillator circuit on the signal circuit in the mixer. The aim of achieving increased cross attenuation between the AFC and radar mixers was not realized, and in fact, the mixers designed on this principle were quite unsatisfactory. All subsequent designs were based on the provision of matched-load conditions for the local oscillator, in the fashion already described.

4·8. Frequency Discontinuities Caused by High-Q Load Circuits.—A discontinuity of another type in the operation of an oscillator results if the load circuit is highly frequency-sensitive. In many cases it is desirable to couple a resonant cavity to the local oscillator of a mixer for frequency reference. If this is attempted it is usually found to be very difficult to make the coupling in such a way that the oscillator may be tuned smoothly through the cavity resonance. For almost any reasonable coupling a discontinuity results, if not for all tubes at least for some samples.

At first thought it might be supposed that it would be necessary only to restrict the admittance contour of the load circuit to a region of the Rieke diagram not including the sink. If this is done, frequency discontinuities can still be found if the rate of transit of the load contour with respect to frequency is sufficiently rapid. To understand how this comes about, let us consider an idealized example. Associated with the tank circuit of the oscillator there is a susceptance which changes at a certain rate with frequency in the vicinity of resonance and which is zero at the frequency of oscillation. Tuning the tube either electronically or by alteration of the cavity resonator (the microwave tank circuit) may be considered as adding a positive or negative susceptance to the circuit so that the zero occurs at a different frequency. To a very good approximation, the susceptance of the tank circuit increases linearly with frequency as shown in Fig. 4·13. To tune the oscillator from the fre-

quency corresponding to A to that corresponding to B, the addition of a susceptance varying from $-S$ to $+S$ is required. This statement is valid, however, only if the load offers no susceptance in addition to that of the tank circuit. If the load does add a susceptance that varies only slowly with frequency, the effect is similar to that of the hypothetical tuning susceptance, and the oscillator frequency is said to be pulled by the load.

Suppose the load includes a resonant cavity, in addition to a matched load at frequencies at which the cavity is nonresonant. In Fig. 4·14 such a load circuit, conforming to the load specifications for the 2K25, is shown. The cavity appears as a short circuit at frequencies removed from the resonant frequency and the circuit is identical with the test

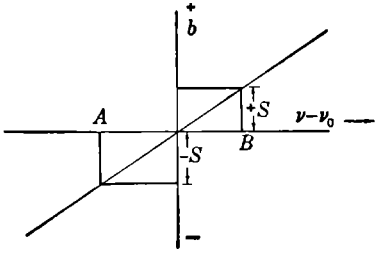

FIG. 4·13.—Susceptance of oscillator tank circuit vs. frequency.

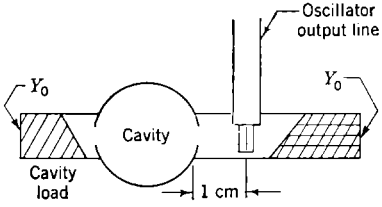

FIG. 4·14.—Resonant load circuit for 2K25 oscillator.

mount is those regions. In the vicinity of resonance, the cavity admittance traverses a circle on a Smith chart in accordance with the formula

$$Y = \left[\frac{\delta_0 + \delta_2}{\delta_1} + j\frac{2(\nu - \nu_0)}{\delta_1 \nu_0}\right] Y_0, \tag{3}$$

where δ_0 is the reciprocal of Q_0, the unloaded Q of the cavity, δ_1 is the reciprocal Q of the input circuit, δ_2 is the reciprocal Q of the output circuit, ν is the oscillator frequency and ν_0 is the resonant frequency of the cavity. This formula can be derived from the equivalent shunt-circuit resonator at low frequency where the admittance is given by

$$Y = g_0 + g_2 + j\left(\omega C - \frac{1}{\omega L}\right)$$

where ω is $2\pi\nu$, g_0 is the shunt conductance of the tuned circuit, and g_2 is the conductance of the output circuit. Using the lumped-constant-circuit formula for Q,

$$\delta_0 = \frac{g_0}{\omega_0 C} \qquad \text{and} \qquad \delta_2 = \frac{g_2}{\omega_0 C},$$

and the resonance condition, $\omega_0^2 = 1/LC$, the equivalent circuit admittance is

$$Y = \left\{\delta_0 + \delta_2 + j\left[\frac{2(\nu - \nu_0)}{\nu_0}\right]\left[\frac{\nu_0 + \nu}{2\nu}\right]\right\}\omega_0 C,$$

or, to a very good approximation, for $|(\nu - \nu_0)/\nu_0| << 1$,

$$Y = \left\{\delta_0 + \delta_2 + j\left[\frac{2(\nu - \nu_0)}{\nu_0}\right]\right\}\omega_0 C.$$

The admittance terminating the input line is this quantity transformed by an amount dependent on the input coupling, which is measured by

$$\delta_1 = \frac{g_1}{\omega_0 C},$$

where δ_1 is the reciprocal Q of the input circuit with the input line matched back. Dividing by g_1 thus gives the admittance in units of the characteristic admittance of the input line, as in Eq. (3).

The load presented to the antenna of the tube in the circuit of Fig. 4·14 consists of the sum of the matched-load admittance Y_0 and that of the cavity, transformed to its reciprocal by the quarter-wavelength line. Thus the total load admittance is

$$Y_L = Y_0\left(1 + \frac{\delta_1}{(\delta_0 + \delta_2) + j2\Delta\nu}\right),$$

where $\Delta\nu$ is substituted for $(\nu - \nu_0)/\nu_0$, or

$$Y_L = \left[\frac{\delta_0^2 + 2\delta_0\delta_2 + \delta_1\delta_0 + \delta_1\delta_2 + \delta_2^2 + 4\Delta\nu^2 - j2\Delta\nu\delta_1}{(\delta_0 + \delta_2)^2 + 4\Delta\nu^2}\right]Y_0. \qquad (4)$$

On an admittance chart this result can be obtained by the steps illustrated in Fig. 4·15. In Fig. 4·15*a* is shown the admittance of the cavity alone, traversed in the direction of the arrow with increasing frequency and with resonance corresponding to the intersection with the conductance axis. In Fig. 4·15*b* is shown the circle representing the admittance of the cavity at the end of a quarter wavelength of line, and in Fig. 4·15*c* is shown the locus of this admittance combined with the matched-load admittance terminating the line in the other direction. The point to be made now is that the contour of load admittance may lie entirely within the acceptable region of the Rieke diagram for the oscillator, but may give rise to frequency discontinuities in the operation of the tube by virtue of an excessive rate of change of susceptance with frequency. The tendency for this to occur is greatest, for the circuit under discussion, if the effective length of the line between the oscillator tube and its antenna in the waveguide is an integral number of half wavelengths.

The added susceptance of the load circuit has a negative rate of change with respect to frequency in the vicinity of resonance for the load cavity. Thus, it tends to counteract the positive rate of change of susceptance of the oscillator cavity. Since the frequency stability of the oscillator is derived from the positive rate of change of susceptance of its tank circuit, the addition of this load circuit reduces the stability by an amount

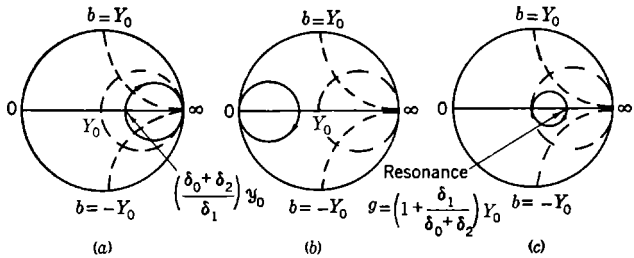

FIG. 4·15 *a*, *b*, *c*.—Locus of load admittance vs. frequency, for cavity in place of the short circuit in the standard tube mount.

depending on the ratio of the negative rate of change of susceptance of the load circuit to the positive rate of change of susceptance of the tank circuit. The situation may be illustrated graphically as in Fig. 4·16. The susceptance of the tank circuit is the straight line, as in Fig. 4·13; that of the load circuit is the curve passing from positive values at frequencies less than the resonant frequency of the cavity to negative

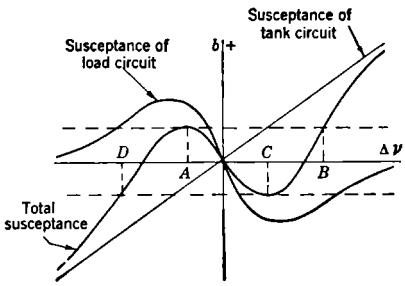

FIG. 4·16.—Diagram of susceptance vs. frequency, illustrating the origin of frequency discontinuities caused by a high-*Q* load circuit.

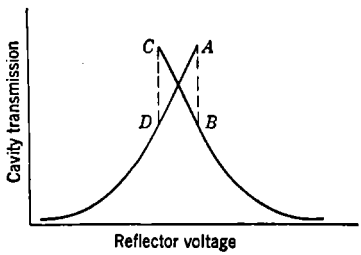

FIG. 4·17.—Cavity transmission vs. reflector voltage, illustrating a frequency discontinuity caused by the cavity.

values at higher frequencies; the total susceptance is the sum. In this example the rate of change of total susceptance is negative in the vicinity of the external cavity resonance; hence the oscillator must be unstable at that frequency. Its actual operation, using the concept of the tuning mechanism discussed in connection with Fig. 4·13, is the following. If the tube is tuned from low frequency through resonance of the external cavity, its frequency of oscillation must jump discontinuously from the

frequency at A to that at B. Returning, the frequencies between C and D are skipped. If the tube is swept in frequency by a sine-wave voltage applied to the reflector, and the cavity transmission is recorded on an oscillograph as a function of this voltage, a pattern like that of Fig. 4·17 is found.

To avoid the discontinuity, the absolute value of the rate of change of susceptance of the load circuit must be kept less, at all frequencies, than that of the oscillator circuit itself. It is necessary to have a measure of the rate of change of susceptance of the oscillator circuit at a point in the line where the maximum rate of change of the susceptance due to the load circuit is known. It is possible to obtain this quantity from a measurement of the pulling figure of the oscillator, since a susceptance added to the load admittance of the oscillator must produce a frequency change sufficient to make an exactly counterbalancing change of susceptance in the oscillator circuit. Thus, the quantity desired is just the reciprocal of the measurable frequency pulling per unit susceptance change in the load admittance in the waveguide. If C is defined as the frequency change in cycles per second per unit change in load susceptance, the condition for continuity of oscillation is

$$\left|\frac{d[Im(Y_L)]}{d\Delta\nu}\right| \leqq \frac{\nu_0}{C}.$$

From Eq. (4), this becomes

$$\left|2\delta_1 \frac{(\delta_0 + \delta_2)^2 - 8\Delta\nu^2}{[(\delta_0 + \delta_2)^2 + 4\Delta\nu^2]^2}\right| \leqq \frac{\nu_0}{C}$$

or, since the left-hand side is a maximum when $\Delta\nu$ is equal to zero,

$$\frac{2\delta_1}{(\delta_0 + \delta_2)^2} \leqq \frac{\nu_0}{C}. \tag{5}$$

The evaluation of this formula for some typical conditions will serve to point out its implications. First, it is necessary to have a typical value of C/ν_0. This quantity has been ascertained for some 2K25 tubes by finding the values of δ_1, δ_0, and δ_2 that give continuous operation, and applying Eq. (5). It has been found that the value is not constant for different parts of the same mode of the oscillator but is higher off center on one side (low-frequency side) than at the center (maximum power) or on the other side. In order to obtain continuous operation to the half-power point on the low-frequency side of the reflector-voltage mode, the left-hand side of Eq. (5) must be made less than about 10^3 for most tubes, so C/ν_0 may be taken as 10^{-3}. Thus C represents a frequency change of about 11 Mc/sec per unit susceptance at a frequency of 9000 Mc/sec. Suppose that it is desired to find the input coupling that can

be used with a cavity having an unloaded Q of 20,000 and a Q of 10,000 when the cavity is loaded by the output circuit alone. Application of Eq. (5), with $(\delta_0 + \delta_2)$ equal to 10^{-4}, gives δ_1 less than 5×10^{-6}, or the Q of the input circuit must be greater than 2×10^5. Since the conductance at resonance, as seen at the antenna of the oscillator tube, is

$$\left(1 + \frac{\delta_1}{\delta_0 + \delta_2}\right) Y_0,$$

the admittance contour described by the load circuit as a function of frequency, corresponding to Fig. 4·15c, must go through Y_0 far from resonance and through a point somewhere between Y_0 and 1.05 Y_0 at

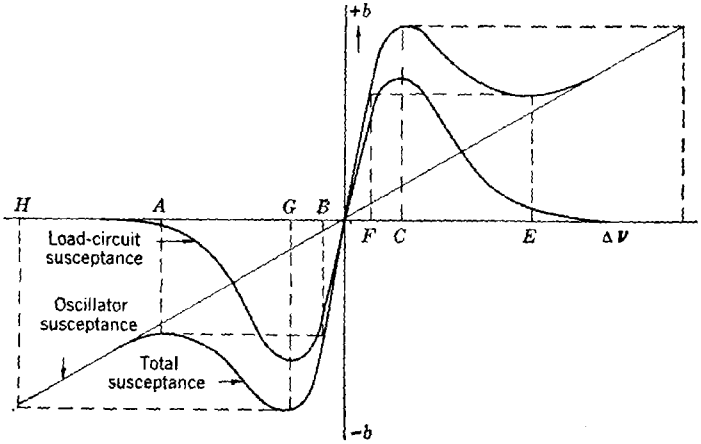

FIG. 4·18.—Susceptance vs. frequency for an integral number of half wavelengths between the cavity and the oscillator, showing stabilization and frequency discontinuities.

resonance. This is certainly a very small excursion and would, at first thought, have been regarded as an easily tolerable load line for the tube. Thus it is evident that this source of frequency discontinuites in the operation of the oscillator must be taken into account when a resonant cavity is to be included as a part of the load circuit of the oscillator.

A possible way in which the tendency of the cavity to produce frequency discontinuities can be reduced is to use a different effective line length between the cavity and the oscillator. In this way the part of the load line which is traversed most rapidly is made to correspond, at the oscillator, primarily to a changing conductance, or, for a line differing in length by a quarter wavelength from that in the example above, a positive rate of change of susceptance. In the latter case the load circuit tends to stabilize the oscillator frequency through increasing the total rate of change of susceptance. Then a much larger coupling between the

oscillator and the cavity can be used. Although discontinuities may still be produced when large coupling is used, they will be of a different kind. The tube may oscillate, at the resonant frequency of the cavity, with greater frequency stability than with a nonresonant load, but two discontinuities, one on each side of resonance, occur for high Q's and tight coupling. This effect is shown on the susceptance-vs.-frequency plot of Fig. 4·18, where discontinuities occur between A and B, C and D and, tuning from right to left, between E and F and G and H. The frequency stabilization obtained when the oscillator is operating in the region between the two discontinuities is such that tuning that would ordinarily cause a frequency change from H to D causes only the change from G to C. Circuits of this type have been used for frequency-stabilization purposes, but the dependence on the line length between cavity and oscillator makes them difficult to put into proper adjustment. When using tubes such as the 2K25, in which the coupling line is a part of the tube and varies in effective electrical length both with frequency and from tube to tube, it is safest to design a cavity load circuit that is satisfactory even when the line length is such that the greatest tendency for causing discontinuities occurs, if these discontinuities are to be avoided at all frequencies and with all tubes. Thus Eq. (5) must be satisfied.

4·9. The Design of Load Circuits Containing Transmission Cavities.— A transmission cavity may be used as a part of the load circuit of the local oscillator of a mixer to serve as a frequency reference, either for frequency measurement or for automatic frequency control. If the presence of the cavity did not affect the operation of the oscillator no matter how high its Q, it would be desired to design the circuit to load the cavity in such a way as to give the maximum rate of change of voltage with respect to frequency at the output terminals of the detector following the cavity. This means that, with a cavity of given unloaded Q, ($Q_0 = 1/\delta_0$), and with a square-law detector, the loading should be such that (TQ_L) is a maximum, where T is the fraction of the available input power to the cavity transmitted to its load and Q_L is the loaded Q. The quantity T can, by arguments similar to those used for Eq. (3·15), be shown to be

$$T = \frac{4\delta_1\delta_2}{(\delta_1 + \delta_2 + \delta_0)^2}, \tag{6}$$

so that

$$TQ_L = \frac{4\delta_1\delta_2}{(\delta_1 + \delta_2 + \delta_0)^3}. \tag{7}$$

If the partial derivatives of TQ_L, first with respect to δ_1 and then with respect to δ_2, are taken, and each set equal to zero, the values of δ_1 and δ_2 giving maximum TQ_L are found to be

$$\left.\begin{aligned}\delta_1 &= 2\delta_2 - \delta_0\\ \delta_2 &= 2\delta_1 - \delta_0\end{aligned}\right\} \tag{8}$$

or

$$\delta_1 = \delta_2 = \delta_0. \tag{9}$$

Thus equal loading by the input and the output circuits is desired, and the loaded Q is one third of the unloaded Q of the cavity. The fraction of available power transmitted to the load is 0.44; that is, the cavity has an insertion loss of 3.5 db at resonance.

The situation is different in practice, however, since, in addition, the inequality of Eq. (5) must be satisfied. The limiting case occurs when Eq. (5) becomes an equality, or when

$$\delta_1 - b(\delta_0 + \delta_2)^2 = 0, \tag{10}$$

where

$$b = \frac{\nu_0}{2C}.$$

If the condition of Eq. (10) is applied to Eq. (7), there results

$$TQ_L = \frac{4b\delta_2}{[b(\delta_2 + \delta_0) + 1]^3(\delta_2 + \delta_0)}. \tag{11}$$

The maximum value of TQ_L can be found by differentiation, and the values of δ_1 and δ_2 at this maximum are

$$\begin{aligned}\delta_1 &= \delta_0\left\{\delta_0 b\left[\frac{8}{9} + \frac{1}{3\delta_0 b} + \frac{4}{3}\left(\frac{4}{9} + \frac{1}{3\delta_0 b}\right)^{1/2}\right]\right\},\\ \delta_2 &= \delta_0\left[\left(\frac{4}{9} + \frac{1}{3b\delta_0}\right)^{1/2} - \frac{1}{3}\right].\end{aligned} \tag{12}$$

If b is taken as the true value of the oscillator, the limiting values of δ_1 and δ_2 are given by Eqs. (12). With these values the oscillator is just on the verge of a discontinuous operation at the cavity resonance for the most restrictive cavity-to-oscillator line length. In practice a certain safety factor is desirable and this can best be achieved through the use of a value for b smaller than the true value by a reasonable factor. Equation (12) should be used only when $b\delta_0$ is less than 0.25. Application of Eqs. (12), when $b\delta_0$ is greater than 0.25, is not desirable, because then the inequality of Eq. (5) holds for the optimum value of TQ_L for the cavity alone. Use of Eq. (12) would result in loading that gives the maximum TQ_L compatible with keeping the oscillator on the verge of discontinuous operation. In Fig. 4·19 are plotted the values of δ_1/δ_0 and δ_2/δ_0 vs. $b\delta_0$ for values of $b\delta_0$ less than 0.25 as given by Eqs. (12). From these curves it is evident that an increase in the output loading of the cavity is much more effective in reducing the pulling of the local oscillator than is decoupling through a decrease in the input loading.

By the use of the condition expressed in Eq. (5), the amount of coupling which just allows continuous operation with equal input and output irises can be calculated. This condition maintains the maximum loaded Q for a given transmission loss. The result is

$$\frac{\delta_1}{\delta_0} = \frac{\delta_2}{\delta_0} = \left(\frac{1}{2\delta_0 b} - 1\right) - \sqrt{\frac{1}{4\delta_0^2 b^2} - \frac{1}{\delta_0 b}}. \tag{13}$$

These values also are plotted in Fig. 4·19. To compare the usefulness of the cavity loaded in these two ways, the expressions for TQ_L may be

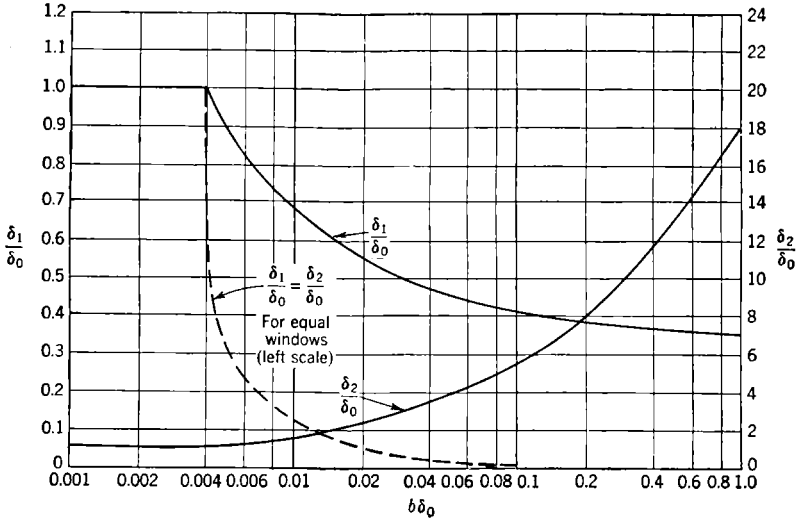

FIG. 4·19—Values of δ_1/δ_0 and δ_2/δ_0 giving maximum (TQ_L), subject to the condition required to avoid frequency discontinuities, that $\frac{\delta_1}{(\delta_0 + \delta_2)^2} \leqslant b$. The dotted curve gives δ_1/δ_0 and δ_2/δ_0, as a function of $b\delta_0$, for equal input and output windows.

used. When the effect on the oscillator may be neglected, Eqs. (7) and (9) give

$$(TQ_L)_{\max} = \frac{4}{27}\frac{1}{\delta_0}. \tag{14}$$

In Fig. 4·20 curves are plotted showing the ratio of the product TQ_L obtainable through the use of Eqs. (12) and for the condition of equal input and output loads to the maximum for the cavity, given by Eq. (14). The calculation for the equal-loading case is simplified for small $\delta_0 b$, since Eq. (13) can be reduced to

$$\frac{\delta_1}{\delta_0} = \frac{\delta_2}{\delta_0} \approx \delta_0 b$$

by expansion of the radical by the binomial theorem, neglecting terms in $\delta_0 b$ to powers higher than the second. The product TQ_L for small $\delta_0 b$ is reduced to

$$TQ_L = \frac{4}{\delta_0} \frac{(\delta_0 b)^2}{(1 + 2\delta_0 b)^3}$$

by this means.

From these curves the advantage of using larger output loading and smaller input loading than those that give minimum transmission loss for a given loaded Q is quite evident. In practice, a further consideration enters: that of the detuning of the reference cavity by the input and output circuits by variations in the admittance of the oscillator circuit or the detector circuit. The formulas and curves show that, if the rate of change of susceptance must be lower than that obtained by loading for maximum TQ_L, the product TQ_L for a given cavity suffers least if the reduction is made by increasing the output coupling and decreasing the input coupling in accordance with Eqs. (12). Therefore, variations in the oscillator admittance pull the cavity frequency less than for maximum TQ_L and variations in the output admittance pull it more. In practice a crystal is used as the detector. To reduce the pulling of the cavity by the change in admittance with changes of the crystal, a dissipative buffering attenuator is used between the cavity and the crystal.

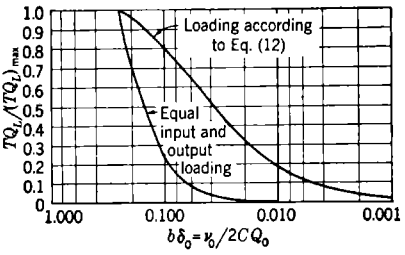

FIG. 4·20.—Ratio of the product TQ_L, obtainable without LO-frequency discontinuities, to the maximum values of TQ_L obtainable from the cavity as a function of $b\delta_0$.

4·10. Load Circuits with Reaction Cavities.—One more example of the application of Eq. (5) may be of interest. It is sometimes desired to couple a reaction wavemeter cavity to the oscillator. A possible circuit would be that of Fig. 4·21, which is identical with Fig. 4·14 except that the load circuit and output hole of the cavity are not present. The condition for continuous operation with this circuit becomes

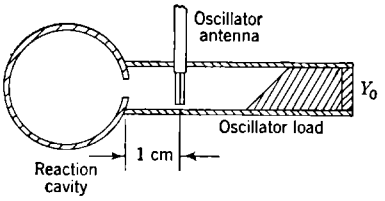

FIG. 4·21.—Circuit for coupling a reaction cavity to the local oscillator.

$$\delta_1 < b\delta_0^2.$$

The marginal condition is given by

$$\frac{\delta_1}{\delta_0} = b\delta_0,$$

which a few representative numbers will show to be a very restrictive condition. For the example cited where b, for the 2K25, was taken as 500, a cavity with an unloaded Q of 5000 can have a value of δ_1/δ_0 at most equal to 0.1. Thus the voltage standing-wave ratio at resonance cannot be less than 10, with the minimum in the plane of the input iris, corresponding to the "undercoupled" condition. An absorption of only about 10 per cent of the available oscillator power gives the circuit, as a reaction wavemeter, only about a 10 per cent dip at resonance in the power delivered to the main load on the oscillator. With a high-Q cavity, such as the TE_{01}-mode wavemeter commonly used in the 3-cm band, $b\delta_0$ would be about 0.02 so that δ_1/δ_0 could not exceed 0.02 and only a 2 per cent dip could be obtained.

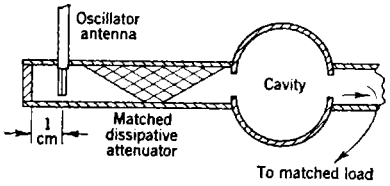

FIG. 4·22.—Circuit for coupling cavity to oscillator with dissipative attenuator for decoupling to prevent frequency discontinuities.

4·11. The Prevention of Frequency Discontiunities by Padding. A common method of preventing discontinuities in frequency caused by having a cavity as a part of the load circuit is to provide matched dissipative attenuation between the cavity and the oscillator, as illustrated in Fig. 4·22. The amount of attenuation required may be calculated as follows. The reflection coefficient from the cavity is given, without attenuation, by

$$\Gamma = \frac{Y_0 - Y_c}{Y_0 + Y_c}$$

where Y_c is the cavity admittance from Eq. (3). If an attenuator inserted between the oscillator antenna and the cavity reduces the power by a factor r, the reflection coefficient measured at the oscillator antenna is also reduced by the factor r, since the wave must transit the attenuator twice. Thus the admittance at the oscillator antenna is

$$Y_r = \frac{1 - r\Gamma}{1 + r\Gamma}$$

for a total path length of an integral number of half wavelengths between the cavity and the antenna.

The reciprocal of this admittance is the quantity desired, since it is when the cavity and the oscillator are placed an odd number of quarter wavelengths apart that the rate of change of susceptance with frequency is negative and so produces frequency discontinuities. Thus

$$Y_L = \frac{1 + r\Gamma}{1 - r\Gamma}.$$

For continuous operation of the oscillator, the condition that must be met is that the derivative of the imaginary part of Y_L with respect to frequency at the resonance frequency of the cavity ν_0 is less in magnitude than the reciprocal of the rate of change of frequency with respect to susceptance, defined previously as C, for the oscillator, or

$$\frac{dB_L}{d\Delta\nu} < \frac{\nu_0}{C}, \tag{15}$$

where $\Delta\nu$, ν_0, and C are all as defined in the previous analysis and B_L is the imaginary part of Y_L. The result is

$$\frac{8r\alpha}{\delta_T[(1-r)\alpha + (1+r)]^2} < \frac{\nu_0}{C}, \tag{16}$$

where δ_T is $\delta_0 + \delta_2$ and α is δ_1/δ_T. This may be written

$$(1-\alpha)^2 r^2 + 2\left(1 - \frac{4\alpha C}{\delta_T \nu_0} - \alpha^2\right) r + (\alpha+1)^2 > 0. \tag{17}$$

For the marginal condition, that is, with the oscillator just on the verge of skipping frequencies, the left-hand side may be taken as equal to zero, and thus a minimum value of r compatible with continuous operation is found. This value, designated as r_1, is

$$r_1 = \frac{\left(\alpha^2 + \dfrac{4\alpha C}{\delta_T \nu_0} - 1\right)}{(\alpha-1)^2}\left\{1 - \left[1 - \frac{(\alpha-1)^2(\alpha+1)^2}{\left(\alpha^2 + \dfrac{4\alpha C}{\delta_T\nu_0} - 1\right)^2}\right]^{1/2}\right\}. \tag{18}$$

If the last term in the bracket is small compared with unity, the radical may be expanded by the binomial theorem and an approximation may be obtained by neglecting terms in the expansion of order higher than the first. Thus the attenuation factor for this condition may be written

$$r_1 \approx \frac{1}{2}\frac{(\alpha+1)^2}{\left(\alpha^2 + \dfrac{4\alpha C}{\delta_T\nu_0} - 1\right)}. \tag{19}$$

Application of these formulas to two special cases are of particular interest. First, for the use of a transmission cavity loaded for maximum $T\mathcal{Q}_L$ in accordance with Eq. (9), δ_T is $2\delta_0$ and α is $\frac{1}{2}$. Thus Eq. (18) becomes

$$r_1 = \left(\frac{2}{b\delta_0} - 3\right)\left\{1 - \left[1 - \frac{9}{\left(\dfrac{2}{b\delta_0} - 3\right)^2}\right]^{1/2}\right\} \tag{20}$$

and Eq. (19) becomes

$$r_1 \approx \frac{9}{2\left(\frac{2}{b\delta_0} - 3\right)}. \tag{21}$$

A curve of these functions is plotted in Fig. 4·23. This curve becomes a straight line for small values of $b\delta_0$. Thus, in this region, the real limit on the product rTQ_L is imposed by the limit in the rate of change of susceptance that the oscillator can stand. With a given value of b for the tube, little is gained by the use of a cavity of higher unloaded Q, since additional attenuation is required which almost exactly compensates the increase in TQ_L. This is also true when no attenuation is used and discontinuities are avoided through the use of Eqs. (12), although the limit is approached less rapidly as Q_0 is increased. In the limit, Eq. (21) becomes

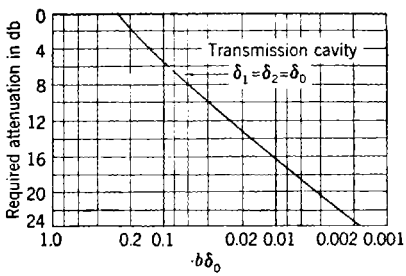

FIG. 4·23.—Attenuation, in decibels, required between the cavity and the oscillator to avoid discontinuities, plotted as a function of $b\delta_0$.

$$r_1 \approx \tfrac{9}{4}\, b\delta_0$$

and the product r_1TQ_L becomes, from Eq. (14),

$$r_1TQ_L \approx \frac{b}{3}. \tag{22}$$

Without the attenuator, and with loading according to Eqs. (12), the product TQ_L becomes, in the limit,

$$TQ_L \approx 4b. \tag{23}$$

Thus, the rate of change of output power from the cavity achieved in this way is 12 times as great as that which can be obtained using the attenuator. In practice the difference is not this great. For $\delta_0 b = 10^{-3}$, the smallest value usually encountered, the rate of change of output power is greater by a factor of 10 when no attenuator is used. For a more usual value of $\delta_0 b$, in the region of 0.02, the advantage is only a factor of 7. Against this advantage, however, must be weighed the greater tendency of the cavity to be pulled by the input- and output-load susceptances when no attenuator is used. There is no decoupling from the oscillator admittance except that afforded by the reduced input iris, and the coupling to the load admittance increases as the square root of $(1/b\delta_0)$, as $b\delta_0$ is decreased. Thus the pulling of the cavity by the load

susceptance would be about 18 times as great, for $b\delta_0$ equal to 10^{-3}, as it would be if an attenuator were used.

Equations (18) and (19) may be applied also to the reaction cavity, that is, the cavity with no output loading. For this case, $\delta_T = \delta_0$ and $\alpha = \delta_1/\delta_0$. With a coupling coefficient α of unity, which is optimum for many applications of a reaction cavity, Eq. (19) is exact and reduces to

$$r_1 = b\delta_0. \tag{24}$$

If α is not unity, but is small compared with $1/b\delta_0$, the attenuation required is given approximately by

$$r_1 \approx \frac{(\alpha + 1)^2}{4\alpha} b\delta_0. \tag{25}$$

As in the previous examples the limit on the rate of change with frequency of the reflected power from the cavity is imposed by the pulling figure of the oscillator tube. Although an increase in the unloaded Q or a change in the coupling factor increases the possible percentage rate of change of the reflected power with frequency, the required increase in attenuation just compensates for this; consequently the absolute rate of change is unaffected. As with transmission cavities, the higher-Q cavities have the advantage of being less susceptible to pulling by the external circuits. The presence of the large attenuation makes it possible to control the external admittance more carefully than if the oscillator were coupled directly to the cavity.

The maximum rate of change of reflected power, for the two methods of decoupling, may be compared. The reflection coefficient Γ for the cavity is

$$\Gamma = \frac{Y_0 + Y_C}{Y_0 - Y_C},$$

where

$$Y_C = \frac{\delta_0}{\delta_1} + j\frac{2\Delta\nu}{\delta_1}.$$

The rate of change of reflected power with frequency is proportional to the attenuation factor r_1 and to the derivative of the square of the absolute magnitude of Γ with respect to $\Delta\nu$,

$$\frac{d|\Gamma|^2}{d\Delta\nu} = \frac{32\delta_1\delta_0\Delta\nu}{[(\delta_1 + \delta_0)^2 + 4\Delta\nu^2]^2}.$$

The maximum of this expression with respect to frequency occurs for $\Delta\nu = \sqrt{3}(\delta_1 + \delta_0)/6$, as is found by setting the second derivative of $|\Gamma|^2$ equal to zero. Thus the maximum rate of change of reflected power with frequency is proportional to

$$R = r_1 \frac{d^2|\Gamma|^2}{d\Delta\nu^2} = \frac{3\sqrt{3}\delta_1\delta_0}{(\delta_1 + \delta_0)^3} r_1. \tag{26}$$

When an attenuator is used for decoupling, and $\delta_1 = \delta_0$, this becomes

$$R_A = \frac{3\sqrt{3}}{8} b. \tag{27}$$

With no attenuator and with $\delta_1 = \delta_0(\delta_0 b)$, Eq. (26) becomes

$$R_B = \frac{3\sqrt{3}b}{(\delta_0 b + 1)^3} \approx 3\sqrt{3}b. \tag{28}$$

Thus the reaction cavity, like the transmission cavity, has a greater effectiveness (this time by a factor of 8 in the limit) for the circuit in which the decoupling is achieved through the choice of the cavity loading, without the addition of attenuation. In all cases the rate of change of power with respect to frequency is also proportional to the output power of the oscillator. The absolute rate of change of power can therefore be increased by increasing the output power of a given oscillator if this can be done without decreasing b.

All these calculations are directed toward obtaining the maximum absolute rate of change of power. It is sometimes desirable to obtain the maximum percentage rate of change and the conditions are then different. Calculations can easily be carried out for these or other requirements by the use of the general condition that the rate of change of susceptance of the load circuit must not exceed the reciprocal of the rate of change of frequency with load susceptance for the tube.

EXAMPLES OF MULTIPLE-FUNCTION MIXERS

4·12. Provision for Beacon Local Oscillator.—In the introduction of this chapter the problem of provision for beacon reception was mentioned and its solution for 10-cm oscillators and mixers was indicated. The only other frequency band in which a radar beacon has been used is the band from 9320 to 9430 Mc/sec. As mentioned previously, the early solution to the problem of beacon provision was to add a second local oscillator, tuned to produce the intermediate frequency when beating with the beacon signal, and coupled to the mixer by means of the insertion of its output antenna into the mixer waveguide. This kind of coupling was, for reasons already mentioned, replaced by one of the coupling mechanisms described in Chap. 3, which provides a matched load for the oscillator.

The design included the addition of a second local-oscillator waveguide and coupling iris, with an adjustment screw, on the side of the radar mixer opposite the radar local oscillator. Such a mixer is shown in

Fig. 4·24. The separate AFC mixer is included in this sketch. The mixer consists of four parallel waveguides with coupling irises between them. To minimize the interaction of the two coupling-window adjustments on the radar mixer, it is helpful to have the screw in one window always inserted beyond the window resonance and the screw in the other window inserted less than the amount giving resonance. The two irises tend to compensate each other in their effects on the received signal. Thus a fixed post long enough to put the iris just beyond resonance may be inserted into the plane of the coupling iris between the beacon local oscillator and the radar mixer.

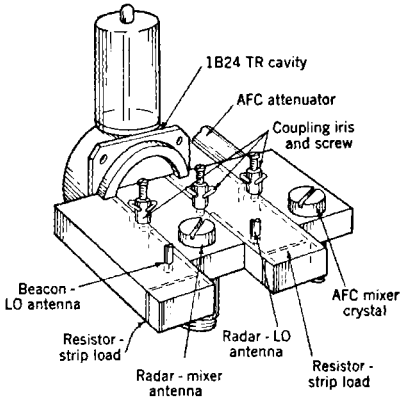

FIG. 4·24.—Functional drawing of a double mixer with beacon local oscillator.

A mixer with an extra local oscillator can be made using any of the coupling schemes or combinations discussed in Chap. 3. The recent introduction of the 2K45 tube, a thermally tuned triode, has made possible a return to the use of a single local oscillator which may be changed from radar reception to beacon reception by means of a switch. Remote control over the oscillator frequency, with tunability over a wide band, is possible with a tube of this type.

It has so far been assumed that the only change necessary to convert the radar receiver to a beacon receiver is a change in the local-oscillator frequency. Most radar systems, however, have some r-f preselection in the form of the TR cavity tuned to the radar frequency. There is some loss at the beacon frequency, the magnitude of which depends upon the difference between the beacon frequency and the radar transmitter frequency. This loss is large for a transmitter located at the end of the scatter band farthest from the beacon frequency. In Fig. 4·25 is plotted a curve of the additional loss at the beacon frequency resulting from the fact that the TR cavity is tuned to the transmitter frequency. The value taken for the loaded Q of the TR cavity was 350—approximately

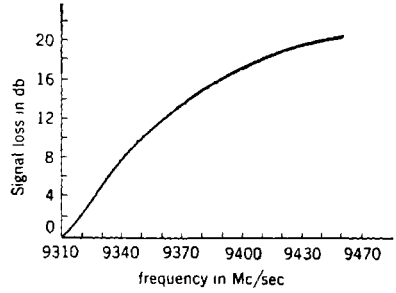

FIG. 4·25.—Beacon-signal loss due to mistuned TR cavity vs. radar transmitter frequency.

that of the 1B24. The abscissa of the curve is the transmitter frequency. This signal loss is sometimes not a serious impairment to the beacon feature of the radar set because the radar signal fails to trigger the beacon at a shorter range than that at which the beacon signal would be lost in the radar-receiver noise. The beacon receiver, because of its wide pass band (the whole 110-Mc/sec scatter band), has a minimum detectable signal greater than that of the receiver in the airplane. In addition, the beacon receiver has much lower antenna gain, since it must receive from and radiate to all directions. Thus, if the beacon signal is received at all, it may be a signal very many times greater than noise.

In some systems there is, however, a large loss on receiving beacon signals because the antenna spends such a small fraction of the time pointing in the direction of the beacon. It has, therefore, become common to add to the 3-cm airborne-radar mixers a special device to reduce the loss in the TR cavity at the beacon frequency when the set is switched to receive beacon signals. Because the beacon frequency is outside the radar transmitter band, on the low-frequency side, the TR cavity must be tuned in the same direction for all transmitter frequencies. Since the beacon frequency is lower than the radar frequency, the input susceptance of the TR cavity is inductive at the beacon frequency and has a magnitude proportional to the difference in frequency between the radar and the beacon. To tune the cavity to the beacon frequency a capacitive susceptance must be added.

To accomplish the retuning of the TR cavity to the beacon frequency, the inverse of "TR-aided tuning" is used. That is, the capacitive susceptance is not added in the TR cavity, but in the mixer waveguide, at a distance behind the TR tube effectively equal to one-half wavelength. Thus the waveguide between the TR cavity and the tuning susceptance contains a very large standing wave. The distance between the TR cavity and the crystal must be increased from the conventional half wavelength to one wavelength in order to accommodate the tuning device. For a mixer to be used only in the frequency band for airborne radar (9320 to 9430 Mc/sec), this is not of much consequence, since its only effect is to narrow the frequency band over which TR-aided tuning is effective. Figure 4·26 shows a vertical-plane cross section of the radar-mixer part of the converter, including the beacon tuner. The tuner is identical in principle with a tuning screw of the choke type and has a rod $\frac{5}{16}$ in. in diameter. The rod is pulled out from the waveguide by a coil spring in a mechanism above the choke when the radar-beacon switch is in the radar receiving position. When the switch is thrown to the beacon position, an armature in a magnetic solenoid causes the rod to be pushed into the waveguide by an amount determined by an adjustable stop. The adjustable stop becomes the tuning control of the TR

cavity for beacon reception. It is adjusted for maximum received signal at the beacon frequency when, with the rod pulled out, the TR tube is tuned for maximum signal strength at the radar frequency. In this way the tuner is adjusted to give the correct amount of pulling for the particular radar transmitting frequency being used. Since the armature of the solenoid must move the rod through about $\frac{3}{8}$ in., it is found that a starting current well in excess of the required holding current is needed. To prevent the solenoid from overheating while holding the tuner in,

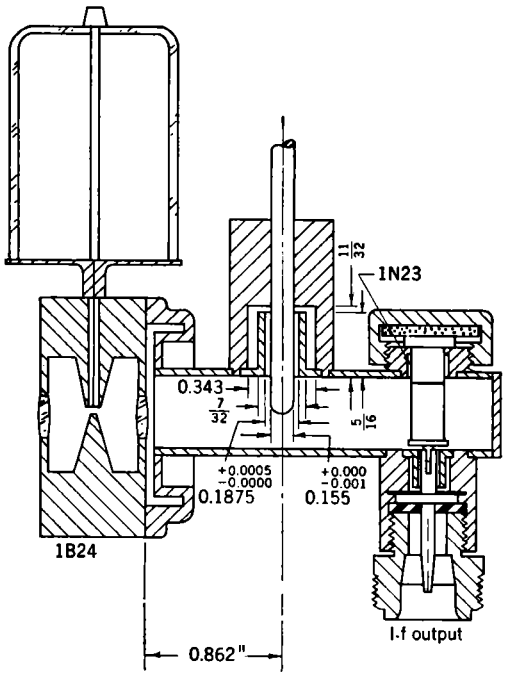

FIG. 4·26.—Cross-sectional view of airborne-radar mixer showing beacon-TR tuner.

it has been found convenient to cause the rod to throw a switch as it comes against the stop. This switch causes sufficient resistance to be placed in series with the solenoid to lower the current to a value such that the tuner is held in place but the solenoid is not overheated. In this way the electromechanical part of the tuner can be made very compact.

There is a limit to the amount of pulling of the TR-cavity frequency that can be obtained by a tuner of this kind. As the standing-wave ratio in the section of waveguide between the TR cavity and the tuner is increased, the circulating currents in the waveguide walls and in the tuner increase. The ohmic losses due to these large currents eventually limit

the susceptance that can be added to the TR cavity as well as introduce a signal loss at the beacon frequency. In Fig. 4·27 is shown a comparison of the beacon-frequency losses with and without the tuner. The plot of loss without tuner vs. radar frequency is taken from Fig. 4·25. It will be seen from this plot that the loss for any transmitting frequency within the airborne band can be held to less than 3 db by the use of the tuner. The loss becomes rapidly greater than this for a pulling somewhat larger than that required to cover this band. As might be expected, the action of the tuner is very sensitive to the spacing between the TR cavity and the tuner, as well as to the depth of insertion of the rod. A tolerance of less than ±0.005 in. on the total effective distance from TR cavity to tuner may add 1 db to the 3-db loss remaining for the largest pulling required for the airborne band. To make possible the setting of the limit stop so that the tuner gives less than 1 db additional loss to the 3-db minimum the adjustment mechanism must be capable of setting the insertion to within 0.001 in. It is thus seen that very high precision is required in the positioning of the tuner on the waveguide, in the bearing surfaces, and in the limit-stop mechanism. In Fig. 4·28 is shown a drawing of a complete two-channel converter including beacon local oscillator and tuner for the beacon TR cavity. Both mixers are increased in length by the half wavelength required for the addition of the TR-tube tuner so that the AFC attenuator used in the converter shown in Fig. 4·4 may be used.

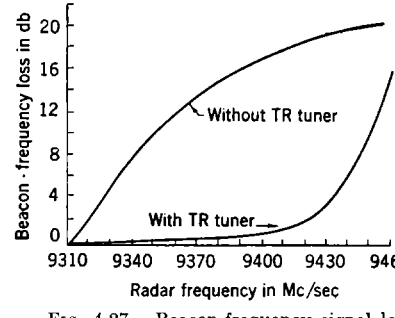

FIG. 4·27.—Beacon-frequency signal loss vs. radar frequency, with and without the TR tuner.

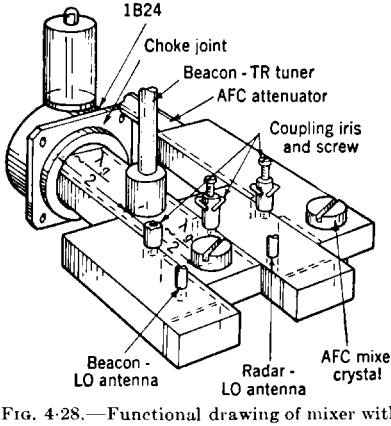

FIG. 4·28.—Functional drawing of mixer with beacon-TR tuner.

4·13. R-f Provision for Beacon AFC.—Automatic frequency control is even more necessary in beacon reception than in radar reception to assure satisfactory performance. When a radar set is used to receive beacon signals it is because the operator does not know his location with respect to the beacon. Thus, the receiver must search in range and

azimuth for the beacon signal. If, at the same time, it is necessary to search in frequency, the chance of the frequency and direction of the receiver being right simultaneously is very small. As a result the operator would be very lucky to find the beacon at all.

Since the system is already searching in the spatial sense, it cannot be depended upon to search in frequency for the beacon signal, find it, and lock onto it, in frequency, in a reasonable time. The beacon program has therefore been based on standard beacon-transmitter frequencies, maintained with precision, so that the receiver may be tuned to an absolute frequency and receive a beacon signal if one is available. For this purpose, a reference cavity is used in the airborne-radar receiver to indicate when the beacon local oscillator is tuned to the correct frequency to receive the standard beacon frequency. The cavity is pretuned to resonate at a frequency differing from the beacon frequency by the intermediate frequency. For the 9310-Mc/sec beacon, cavities resonant at 9280 Mc/sec have been commerically produced, for 30-Mc/sec intermediate-frequency receivers, and cavities resonant at 9250 Mc/sec for 60-Mc/sec intermediate-frequency receivers. These cavities, called the 1Q23 and 1Q22 respectively, are similar in mode to the TR cavity but have only one post and, consequently, smaller capacitive loading. They are evacuated and sealed, with glass input and output irises, and include a copper and invar temperature-compensating strut to ensure a low temperature coefficient of frequency. In Fig. 4·29 a cutaway view of one of these cavities is shown. The cavity is mounted in an aluminum block containing input and output waveguides and is put into a circuit by connecting waveguides with standard choke joints to this block. The specifications of this cavity are such that, when the cavity is mounted between a matched generator and detector, the peak in its transmission curve occurs at a frequency within about ± 1 Mc/sec of the desired absolute frequency (9280 or 9250) at any temperature or pressure encountered in airborne-system operation. The cavity has an unloaded Q of about 5000 and the loaded Q, when matched loads are connected to the input and output waveguides, is about 2500.

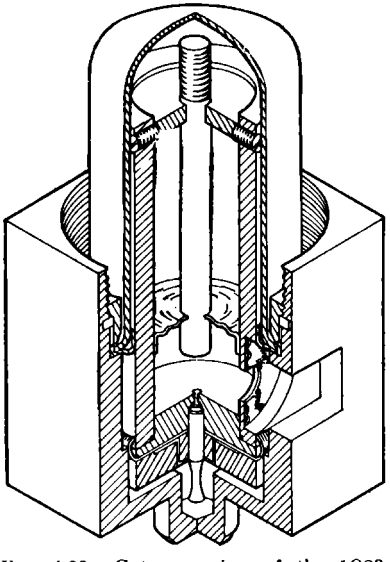

FIG. 4·29.—Cutaway view of the 1Q23 cavity.

A cavity of this sort can be used either as an indicator to aid manual tuning of the beacon LO or as a source of error signal for an AFC circuit. For either use the r-f circuit requirements are the same if the cavity is operated as a transmission cavity. It is also possible to block the exit waveguide and use the cavity as a reaction device, although this possibility will not be discussed here. The pitfalls are, of course, similar to those for the transmission wavemeter and are chiefly concerned with the application of the results of Secs. 4·8 to 4·11.

Figure 4·30 shows an extension of the converter shown in Fig. 4·28 to include the reference cavity and an output crystal detector in the

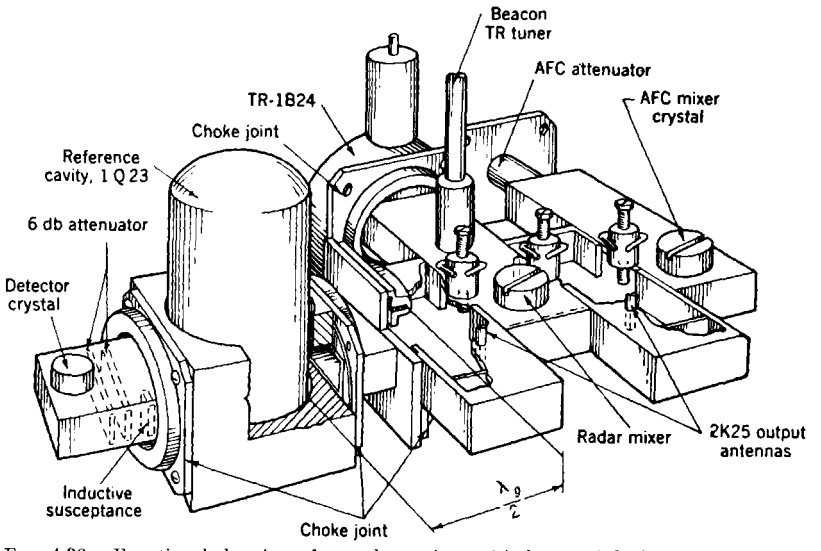

FIG. 4·30.—Functional drawing of complete mixer with beacon LO, beacon-TR tuner, and reference cavity for beacon AFC.

beacon-LO circuit. The cavity is connected as a stub line on the side of the beacon-LO waveguide with the center line of the stub waveguide one-quarter waveguide wavelength back from the short-circuited end of the LO waveguide. Since the cavity is completely reflecting at frequencies well removed from its resonant frequency, the length of the line from the cavity to the wall of the LO waveguide is made one-half waveguide wavelength. The admittance presented at the LO antenna is thus approximately the same as in the circuit without the cavity, except for frequency sensitivity. Since the beacon local oscillator need function only in the region of the beacon frequency and since this frequency differs by only about 1 per cent from the oscillator specification-test frequency, the added frequency sensitivity is not serious.

It is found that, with a matched load on the beacon cavity, many local-oscillator tubes have frequency discontinuities in the region of the cavity resonance. This has been interpreted as indicating that the condition of Eq. (5) is not satisfied. Experiments have shown that, if discontinuities are to be avoided, the left-hand side of Eq. (5) must be less than 10^3. Since the cavity design was fixed, it was not possible to adjust the coupling irises and apply Eqs. (12); instead, continuous operation was obtained through increasing the output loading δ_2, by means of a mismatched load circuit. The crystal detector was mounted in the crystal mount of a standard mixer and was buffered with a 6-db dissipative attenuator to reduce both pulling in frequency and variations in δ_2 due to changes in admittance from crystal to crystal. The input admittance of this attenuator was very close to Y_0 for any crystal; the input voltage standing-wave ratio was less than 1.25. An inductive iris was introduced, by inserting a vane from one side of the waveguide, a sufficient amount to produce a voltage standing-wave ratio of 4 on the input side of the iris. The distance from the iris to the output window of the cavity was then chosen so that the apparent load on the cavity was $4Y_0$ instead of Y_0. The proper distance was found by measurement, at frequencies on either side of resonance, of the position of the apparent short circuit when a wave was sent toward the output iris of the cavity. A voltage *minimum* in the standing-wave pattern produced by the inductive iris was made to fall at this position. Thus δ_2, the inverse output Q, was increased fourfold. With this load circuit, all oscillator tubes that were tried oscillated continuously when tuned through the resonance frequency of the cavity provided that this frequency fell above the one-quarter-power points in the reflector-tuning mode.

For this cavity and coupling circuit, the left-hand side of Eq. (5) can be calculated. Since the unloaded Q is known to be 5000 and since the Q loaded by matched waveguides is 2500,

$$\delta_0 = 2 \times 10^{-4}$$

and

$$\delta_1 = \delta_2 = 10^{-4}$$

for a matched-waveguide output load. The output load used, however, resulted in

$$\delta_2 = 4 \times 10^{-4},$$

and the total δ was 7×10^{-4}, or the loaded Q was reduced to 1420. Using these values in Eq. (5), it can be inferred that ν_0/C should be taken to be about 5.5×10^2 to achieve continuous operation. The quantity $b\delta_0$, the abscissa of Fig. 4·19, is thus 0.055. Figure 4·19 shows that the input and output loadings, for maximum TQ_L should be 0.58 δ_0 and

$2.2\delta_0$, respectively. Thus, fortuitously, the load conditions achieved are very close to the optimum for this consideration, since δ_1 was $0.50\delta_0$ and δ_2 was $2.0\delta_0$.

In Fig. 4·31 a second circuit using the beacon reference cavity is shown. This is a converter for a beacon receiver, and the cavity is used only as an aid to manual tuning. The cavity is so positioned that, at frequencies removed from the resonance frequency, it presents a short circuit at such a distance behind the resistor strip that the resistor strip appears as a matched load for the waveguide. The admittance as measured in the plane of the resistor strip is thus Y_0 plus the reciprocal

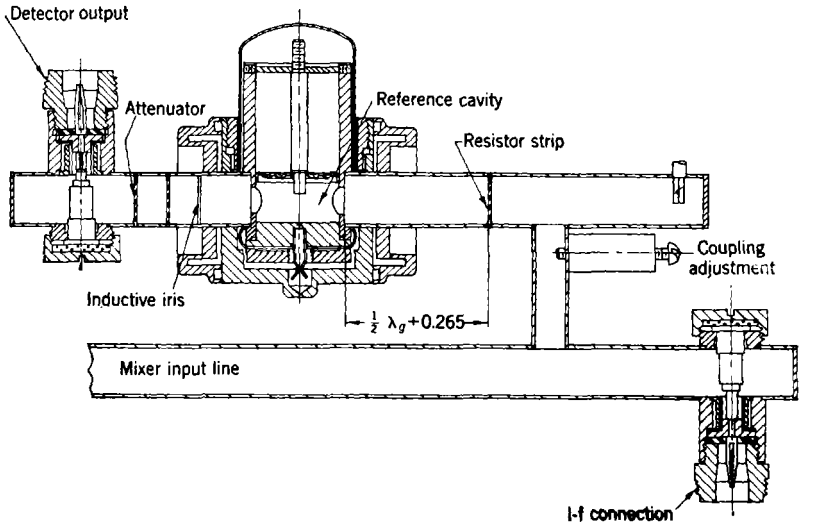

FIG. 4·31.—Single mixer with reference wavemeter for local oscillator.

of the cavity admittance, just as is the admittance at the antenna of the oscillator tube in the circuit of Fig. 4·14. The conditions for continuous operation of the oscillator tube are identical with those in the previous discussion, and thus the same cavity load circuit is used.

4·14. Representative Mixers with Multiple Functions.—Included at the end of this chapter is a group of drawings showing, in somewhat more detail than in the sketches of the text, some mixers representative of the methods described in the text.

First in the group, Fig. 4·32, is a broadband two-channel mixer for use with a broadband duplexer using the 1B24 TR tube. This mixer uses 1N23A or 1N23B crystals and has a loss due to crystal mismatch of less than 1.5 db for any crystal of this type when operated in the band from 9600-Mc/sec to 8500-Mc/sec. Many variations of this basic mixer have been designed for use in particuar radar systems. The differences

are in mechanical devices; for example, a plate may be attached to the mixer so that the crystals and the local oscillator can be included in the shield box with the i-f amplifier while the TR tube and AFC attenuator are outside the box. The plate thus becomes a part of one wall of

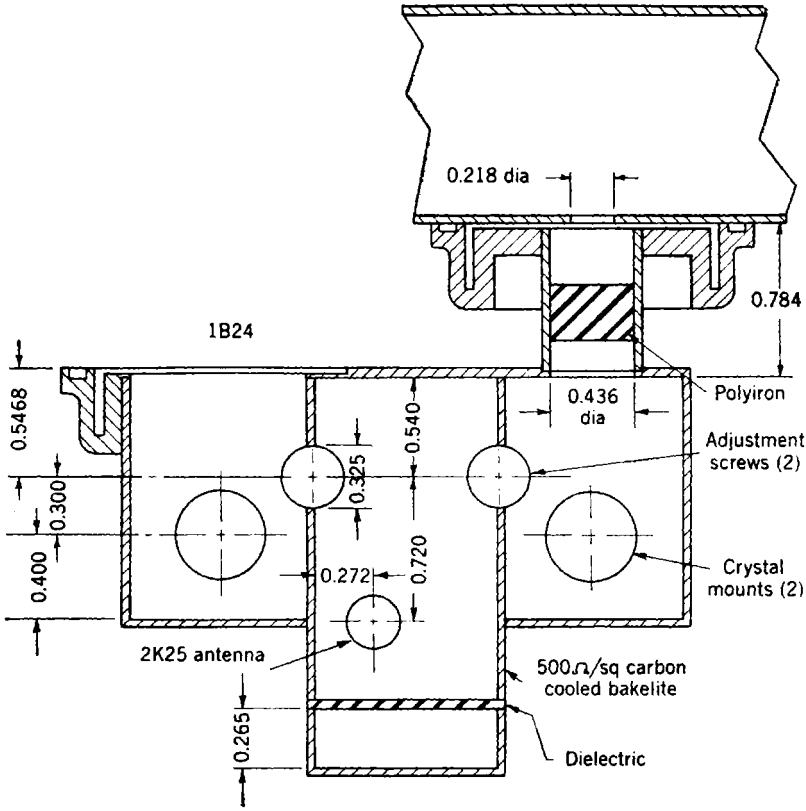

FIG. 4·32.—Double mixer for use with 1B24 TR tube, 2K25 local oscillator, and 1N23A or 1N23B crystals, in the frequency band from 8500 to 9600 Mc/sec., at a transmitter power level of 50 kw. (For perspective view see Fig. 4.4.)

the shield box and the duplexer waveguide runs parallel to this wall, outside the box.

Figure 4·33 is a drawing of the two-channel mixer for the 1.25-cm band. This mixer uses 1N26 crystals, a 2K33 or 2K50 local-oscillator tube and a 1B26 TR tube. This mixer is representative of an LO coupling circuit of the channel type applied to the double mixer and operates at 24,000 Mc/sec in a band ± 2 per cent in width.

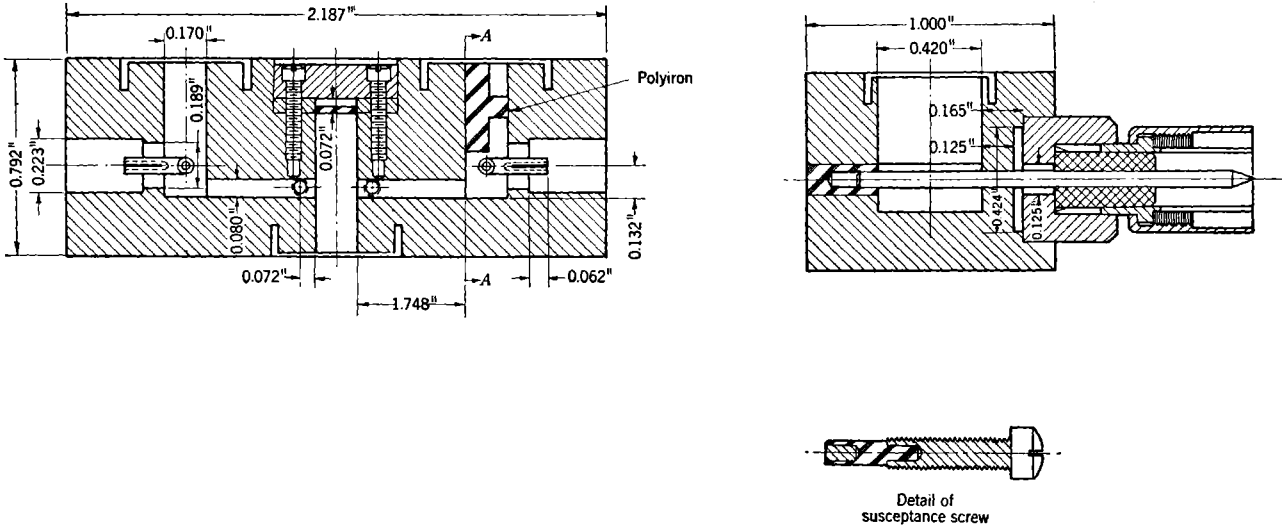

FIG. 4·33.—Cross-sectional view of double mixer for use with 1B26 TR cavity, 2K33 local oscillator, and 1N26 crystal, in the 1.25 ± 1 per cent wavelength band.

The last of the drawings, Fig. 4·34, shows the beacon provision for the band from 9320 to 9430 Mc/sec. The beacon-tuner and beacon-LO

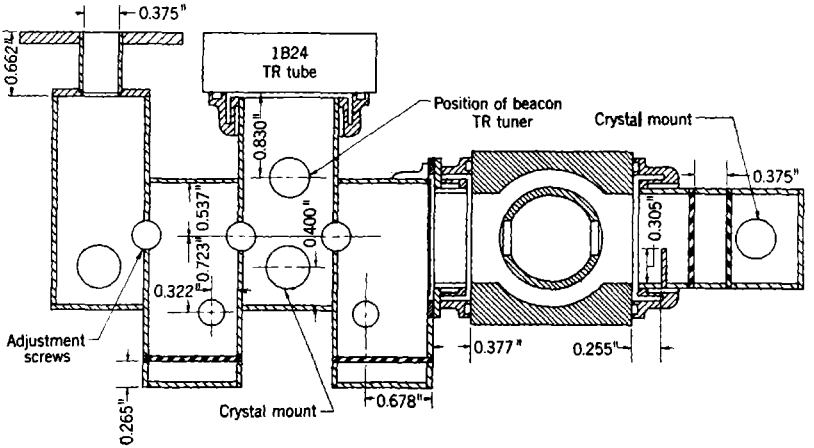

FIG. 4·34.—Double mixer for 9375 Mc/sec with beacon-TR tuner, beacon AFC, for use with 1N23, 1N23A, or 1N23B crystals, 1B24 TR cavity, and 2K25 LO tubes. (For perspective view, see Fig. 4.30).

circuits, with the reference cavity for beacon AFC, are included. In this mixer also, 1N23A and 1N23B crystals, 2K25 local oscillators, and a 1B24 TR cavity are used.

CHAPTER 5

LOCAL-OSCILLATOR NOISE

In Secs. 1·4 and 2·3, the effective over-all noise figure of a superheterodyne microwave receiver was shown to depend on three quantities; the conversion loss and noise temperature of the crystal mixer and the effective over-all noise figure of the i-f amplifier. At frequencies below 3000 Mc/sec, independent measurements of these three quantities give results which, when applied in Eq. (1·26), are in good agreement with the results of direct measurements of the effective over-all noise figure of complete receivers. At higher frequencies, however, especially when low intermediate frequencies are used, the results of over-all measurements are larger than those predicted by the independent measurements of loss, noise, and i-f noise figure.

In the apparatus described in Sec. 2·13, for measuring noise temperature, a resonant cavity is included between the r-f oscillator and the mixer circuit. The purpose of this cavity, which is tuned to transmit the oscillator signal, is to remove spurious frequencies from the oscillator signal. If such spurious signals were to arrive at the mixer with the local-oscillator signal, they would be converted by the mixer to a frequency equal to the difference between the frequency of the local-oscillator signal and that of the spurious signals. Thus, any such signals lying above or below the local-oscillator frequency by an amount equal to the intermediate frequency of the test apparatus would be converted to the intermediate frequency and, therefore, would increase the apparent noise temperature of the crystal. It is found experimentally that the result of the noise-temperature measurement, in the bands above 3000 Mc/sec, is always significantly smaller when a filter cavity is used. The conclusion is, therefore, that some spurious signals in the two bands to which the receiver is sensitive do accompany the local-oscillator signal. This must be true of the system receiver also; in the absence of a filter cavity in the local-oscillator circuit, a noise figure must result that is larger than the minimum possible for the given crystal and i-f amplifier combination.

5-1. Generation and Effect of Local-oscillator Noise.—The spurious signals accompanying the local-oscillator signal are termed "local-oscillator noise." The electron beam passing through the oscillator cavity contains noise-current components at all frequencies, because it is made up of discrete electronic charges. If a klystron oscillator tube is operated at a reflector voltage that does not cause it to oscillate, a noise

spectrum can be detected in its output circuit. The noise voltage in the output circuit is largest at the resonant frequency of the oscillator cavity, because the coupling to the electron beam is most efficient at this frequency. A curve of the noise voltage in the output circuit as a function of frequency closely resembles a resonance curve for the oscillator cavity. Reflex-klystron oscillator tubes, operated in this way, have been used as noise generators for use in the measurement of over-all noise figures of microwave receivers.

It is reasonable to expect that when the tube is oscillating the noise voltages in the output circuit developed from spurious frequencies will be the same at frequencies on either side of the oscillation frequency. In addition, low-frequency noise components in the electron beam may, through amplitude and frequency modulation of the oscillator signal, produce noise sidebands lying at frequencies above and below that of the oscillator signal. These sidebands too, will be coupled to the output circuit with decreasing efficiency at frequencies removed increasingly far from the resonant frequency of the oscillator cavity. Thus, the oscillator may be expected to have a noise spectrum in its output circuit similar to that shown in Fig. 5·1.

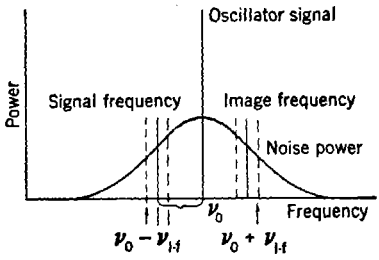

FIG. 5·1.—Local-oscillator noise as a function of frequency.

Whether or not the local-oscillator noise causes deterioration in the receiver noise figure depends upon the noise power in the local-oscillator spectrum at the signal and image frequencies of the receiver. For a low-frequency receiver and, for example, a 30-Mc/sec intermediate frequency, the loaded Q of the oscillator cavity is usually sufficiently high to reduce the signal- and image-frequency noise components from the local oscillator to a negligible level. For a given intermediate frequency, as the receiver frequency is increased the filtering by the local-oscillator cavity becomes less effective. To maintain the same filtering effect with a constant oscillator-cavity Q, it is necessary to increase the intermediate frequency proportionately to the increase in the local-oscillator frequency. In practice, oscillator tubes at high frequencies have cavities of lower loaded Q, because the skin depth decreases with increasing frequency and because the volume-to-surface ratio of the cavity decreases. Thus, local-oscillator noise would be expected to become increasingly apparent as the signal frequency is increased, even if the ratio between the local-oscillator and intermediate frequencies were held constant.

The presence of a significant amount of local-oscillator noise may be a factor determining the choice of the intermediate frequency. Especially for receivers at 9000 Mc/sec and above, the selection of an intermediate frequency has involved a choice between the reduced local-oscillator noise at high intermediate frequencies, on the one hand, and the lower amplifier noise at low intermediate frequencies on the other hand. Although the intermediate frequency most widely used at the Radiation Laboratory was 30 Mc/sec, an intermediate frequency of 60 Mc/sec was used in many 3-cm and most 1.25-cm receivers, in order to obtain a somewhat improved over-all noise figure in the presence of local-oscillator noise. The relative merits of several possible intermediate frequencies for a particular receiver must be decided from a knowledge of the magnitude of the noise contribution from the local oscillator at these frequencies, and from the i-f-amplifier noise figure that can be achieved at each intermediate frequency.

5·2. Magnitude of Local-oscillator Noise for Typical Tubes.—To facilitate the choice of intermediate frequencies and of other operating parameters in converters, a program of measurement of local-oscillator noise was undertaken by Kuper and Waltz.[1] Measurements were made in the 3.2-cm band on 723A/B tubes, and in the 1.25-cm band on 2K33 tubes and on a few samples of other types. The quantity that was measured was the apparent noise temperature of a crystal driven, through an adjustable dissipative attenuator, from the local-oscillator tube under measurement. Measurements were made at intermediate frequencies of 30, 60, and 90 Mc/sec, at several points in the electronic tuning range of the tube. For each point in the electronic tuning range, the coupling between the crystal and the oscillator was set so that 0.5 ma of rectified crystal current was produced. The 3.2-cm crystal had a conversion loss of 7 db and a noise temperature, in the absence of oscillator noise, of 1.2, and so was typical of the crystals used in a 3.2-cm receiver. For the 1.25-cm measurements the crystal, a type 1N26, had a conversion loss of 8.5 db and an intrinsic noise temperature of 2. The results for a typical 723A/B oscillator are given in Table 5·1. The data given in the table represent the increase in apparent noise temperature of the crystal over its value in the absence of incident r-f noise power (1.2). Values are given for the different reflector-voltage modes, for each of the three conditions of electronic tuning at each value of intermediate frequency. The column labeled "Center" corresponds to the reflector voltage giving maximum power for each mode and the columns labeled, "Half-power"—"High" and "Low"—denote respectively the values at reflector voltages giving half maximum output power

[1] J. B. H. Kuper and M. C. Waltz, "Measurements on Noise from Reflex Oscillators," RL Report No. 872, Dec. 21, 1945.

on the high- and low-frequency sides of the center frequency. To maintain the 0.5-ma crystal current, it was, of course, necessary to decrease the attenuation between the oscillator and the crystal at these half-power points.

TABLE 5·1.—INCREASE IN CRYSTAL NOISE TEMPERATURE FOR TYPICAL 723A/B OSCILLATOR TUBE

Reflector voltage mode	30-Mc/sec intermediate frequency, reflector tuning			60-Mc/sec intermediate frequency, reflector tuning			90-Mc/sec intermediate frequency, reflector tuning		
	Center	Half-power		Center	Half-power		Center	Half-power	
		High	Low		High	Low		High	Low
250v	3.2	10	6.3	1.3	3.7	2.6	0.3	0.5	0.5
170	1.9	8	3.8	0.9	2.9	1.9	0.2	0.4	0.4
105	2.0	11	3.9	1.2	4.1	2.5	0.3	0.8	0.7
70	3.0	16	5.5	2.1	7.4	4.0	1.0	2.1	1.9
45	160	720	330	73	150	140	36	60	75

The over-all noise figure of a receiver, using this typical 723A/B and a crystal with a conversion loss of 7 db in a nonresonant mixer circuit is found from the expression

$$F^* = L(F^*_{\text{i-f}} + t'_c - 1) \tag{1}$$

where t'_c is the crystal noise temperature t_c plus the appropriate value from Table 5·1. These values apply exactly only if the conversion loss is 7 db, but are approximately correct for any crystal operated at 0.5-ma crystal current. This is because the rectified current is roughly proportional to the reciprocal of the conversion loss. A crystal having a smaller loss would convert the incident noise power to the intermediate frequency more effectively, but the reduction in incident power, in both the local-oscillator signal and the noise sidebands, involved in reducing the rectified current to 0.5 ma would approximately compensate for this improved conversion efficiency. In systems use, the LO power level is set to give about 0.5 ma of crystal current. The values of Table 5·1, therefore, are significant for most crystals used in systems.

Table 5·2 shows similar data from the experiments at 1.25 cm. These data were taken with a 2K33 tube, operated in the 200-volt reflector-voltage mode, and again the crystal current was held at 0.5 ma. The data are similar to those for the 723A/B tube, in that more noise is found when the tube is tuned electronically to the half power point in the high-frequency direction than when it is tuned in the low-frequency direction. It has also been found from these experiments that the noise

TABLE 5·2.—INCREASE IN NOISE TEMPERATURE OF CRYSTAL AT 1.25 CM DUE TO NOISE FROM 2K33 OSCILLATOR TUBE

30-Mc/sec intermediate frequency, reflector tuning			60-Mc/sec intermediate frequency, reflector tuning			90-Mc/sec intermediate frequency, reflector tuning		
Center	High	Low	Center	High	Low	Center	High	Low
4.61	23.6	9.70	2.10	5.93	4.54	0.89	2.32	1.89

spectrum is not as simple as that shown in Fig. 5·1. By means of a cavity resonator coupled to the waveguide between the attenuator and the crystal, it was possible to reflect the noise components in one sideband without affecting the transmission of the local-oscillator signal or of the other sideband. In this way the noise in the two sidebands could be compared by reflecting first one and then the other. It was found that the noise power was not the same in the two sidebands and that the relative magnitudes of the two noise powers depended upon the operating point in the reflector tuning range. The details of this effect and the theoretical explanation will be found in Vol. 7 of this series.

5·3. Effect of Local-oscillator Noise on Over-all Noise Figure.—The amount of deterioration in over-all noise figure that results from the existence of local-oscillator noise depends upon the other quantities that appear in Eq. (1). To show its approximate value, however, a few examples will be considered. It is convenient to express the noise figure in decibels, because the relative merit of two receivers is determined by the ratio of two noise figures. Thus, in decibels,

$$F^* = L + 10 \log_{10} (F^*_{\text{i-f}} + t'_c - 1). \tag{2}$$

At 3.2 cm a good crystal might have a conversion loss of 6 db and a noise temperature very close to unity. At 30 Mc/sec it is possible to obtain an i-f noise figure of about 2 db, or as a numerical factor, 1.6. With such a combination, Eq. (2) gives 8 db for the over-all noise figure in the absence of local-oscillator noise. The ratio, expressed as a difference in decibels, of the noise figure that includes local-oscillator noise to the noise figure in the absence of such noise is

$$F_N = 10 \log_{10}\left(1 + \frac{t'}{F^*_{\text{i-f}} + t_c - 1}\right), \tag{3}$$

where t' is the quantity tabulated in Tables 5·1 and 5·2. The quantity F_N expresses the deterioration in over-all noise figure due to the presence of local-oscillator noise. The interesting range of i-f amplifier noise

figures is from 2 db to 5 db, or from a factor of 1.6 to a factor of 3. In Fig. 5·2, the quantity F_N in decibels is plotted as a function of t' $(F^*_{\text{i-f}} + t_c - 1)$ for a range from 0 to 10. Table 5·3 gives values, in decibels, of the increase in over-all noise figure due to the presence of the amounts of local-oscillator noise taken from Tables 5·1 and 5·2. The values given for 3.2 cm correspond to the 170-volt mode of the typical 723A/B tube. These are given for four assumed values of $(F^*_{\text{i-f}} + t_c - 1)$ and for intermediate frequencies of 30, 60, and 90 Mc/sec. The value of 1.6 for this expression could correspond to an i-f noise figure of 1.6 (2 db), and a crystal noise temperature of unity. The higher values allow for larger crystal noise temperatures, higher i-f noise figures, or both. Thus, the value 3 could result from an i-f noise figure of 2 (3 db), and a crystal noise temperature of 2. Similar numbers are also given for the 1.25-cm receiver using the typical 2K33 tube used for the data of Table 5·2.

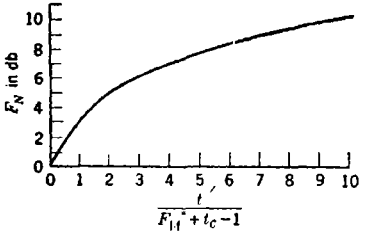

FIG. 5·2.—Deterioration of effective over-all noise figure vs. $t'/(F^*_{\text{i-f}} + t_c - 1)$.

TABLE 5·3.—INCREASE IN OVER-ALL NOISE FIGURE OF RECEIVER (IN DECIBELS) FOR VARIOUS VALUES OF $(F^*_{\text{i-f}} + t_c - 1)$ CORRESPONDING TO LOCAL-OSCILLATOR NOISE OF TABLES 5·1 AND 5·2

	$F^*_{\text{i-f}} + t_c - 1$	30 Mc/sec			60 Mc/sec			90 Mc/sec		
		Center	High	Low	Center	High	Low	Center	High	Low
3.2 cm Typical 723A/B in 170-volt mode	1.6	3.4	7.8	5.2	1.9	4.5	3.4	0.4	1.0	1.0
	2	2.6	6.9	4.6	1.6	3.9	2.9	0.3	0.7	0.7
	3	2.1	5.6	3.6	1.1	3.0	2.1	0.2	0.4	0.4
	4	1.4	4.8	2.9	0.8	2.4	1.7	0.1	0.3	0.3
1.25 cm Typical 2K33 in 200-volt mode	1.6	5.9	11.8	8.5	3.6	6.7	5.8	1.9	3.9	3.4
	2	5.2	11.1	7.7	3.1	6.0	5.2	1.6	3.4	2.9
	3	4.1	9.5	6.3	2.3	4.7	4.0	1.1	2.5	2.1
	4	3.3	8.3	5.3	1.8	4.0	3.3	0.9	1.9	1.6

From this table it is evident that the effect of local-oscillator noise on the effective over-all noise figure of a receiver is large, even at 3.2 cm and with a 60-Mc/sec intermediate frequency. The difference between the numbers in the columns for 60 Mc/sec and those in the columns for 30 Mc/sec, in the same crosswise row, represent the decrease in noise

figure that could be achieved through the use of the higher intermediate frequency, if the same i-f amplifier noise figure were obtained at these two frequencies. In practice the i-f amplifier noise figure achieved at 60 Mc/sec is larger than that at 30 Mc/sec; consequently the full advantage indicated by the table cannot be realized. For 3.2-cm receivers the relative advantages of 30-Mc/sec and 60-Mc/sec i-f amplifiers have been the subject of considerable controversy, and little thought has been given to the use of frequencies higher than 60 Mc/sec for the purpose of reducing the effect of local-oscillator noise. In the 1.25-cm band, it has usually been considered advantageous to use an intermediate frequency of at least 60 Mc/sec and the trend was toward even higher frequencies. Another solution to the LO-noise problem, to be discussed in Chap. 6, allowed the use of 30 Mc/sec as an intermediate frequency, however, even for receivers at 1.25 cm. Intermediate frequencies higher than 60 Mc/sec were therefore not used extensively.

In practice, when the local oscillator is tuned off center in the electronic tuning range, the local-oscillator noise is not so large as is indicated in the tables, because the local-oscillator coupling is left fixed at the value giving about 0.5 ma at the center of the tuning range. The coupling at the half-power points in the electronic tuning range is thus only one-half as great as that to which the data apply, and the crystal current is only about 0.25 ma. Accompanying this reduction in local-oscillator power is a small increase in conversion loss but this is less than 0.5 db in most cases. Because the smaller coupling reduces the incident noise power correspondingly, the increase in noise temperature of the crystal, caused by incident local-oscillator noise at the half-power points, is only half that given in Tables 5·1 and 5·2. For most conditions this gives almost the same effect at the low-frequency half-power point as at the center of the tuning range. The increase in over-all noise figure at the center frequency, therefore, holds approximately over the low-frequency part of the electronic tuning range. In the high-frequency portion of the electronic tuning range there is an increase in local-oscillator noise, but its effect is somewhat less than that indicated in Table 5·3. Thus the value at the center of the electronic tuning range is the most significant. In order to minimize the deterioration due to local-oscillator noise it is helpful to operate the tube principally in the low-frequency half of the reflector mode.

5·4. Reduction of Local-oscillator Noise by the TR Cavity.—The measured values of local-oscillator noise and its effect on the over-all noise figure of the receiver apply to a converter circuit only when there are no resonant parts in the LO coupling circuit. For most converters used in radar, therefore, this condition does not hold, because the resonant TR cavity influences the coupling between the local oscillator and

the crystal. For circuits in which iris coupling is used, it is required that the local-oscillator wave reflected by the TR cavity reinforce the wave traveling directly from the iris to the crystal. The coupling of power from the local oscillator to the crystal is therefore almost four times as great as it would be if the resonant TR cavity were not present. The coupling of local-oscillator noise at the image frequency is also increased by this factor, because of reflection by the TR cavity. At the signal frequency, however, the TR cavity is resonant and its reflection coefficient is small. Local-oscillator noise in the signal sideband does not become reinforced by reflection from the TR cavity; thus only one-quarter as much power at the signal frequency is coupled from the local oscillator to the crystal. If the available noise powers in the signal- and image-frequency sidebands were equal, the ratio of total noise power to LO signal power coupled to the crystal would be only five-eighths as large as in a nonresonant mixer circuit. Allowing for some reflection of signal-frequency noise by the TR cavity, a value for the increase in crystal noise temperature 0.7 times the values given in Tables 5·1 and 5·2 may be used to estimate the effect on over-all noise figure in a converter circuit of this kind. Similar results are obtained for the other coupling schemes that depend upon reflection of the local-oscillator wave by the TR cavity. Coupling of local-oscillator power to the crystal through a directional coupler, however, does not result in this reduction in local-oscillator noise.

In Table 5·4 are given values of the increase in over-all noise figure, similar to those of Table 5·3 but computed on the assumption of a reduc-

TABLE 5·4.—INCREASE IN OVER-ALL NOISE FIGURE OF RECEIVER, IN DECIBELS, FOR VARIOUS VALUES OF $(F^*_{i\text{-}f} + t_c - 1)$, WITH REDUCTION IN LOCAL-OSCILLATOR NOISE BY TR CAVITY AND WITH COUPLING INDEPENDENT OF POINT IN ELECTRONIC-TUNING RANGE

	$F^*_{i\text{-}f} + t_c - 1$	30 Mc/sec			60 Mc/sec			90 Mc/sec		
		Center	High	Low	Center	High	Low	Center	High	Low
3.2 cm Typical 723A/B in 170-volt mode	1.6	2.6	4.4	2.6	1.4	2.1	1.5	0.2	0.4	0.4
	2	2.2	3.8	2.2	1.2	1.8	1.3	0.2	0.3	0.3
	3	1.6	2.9	1.6	0.8	1.3	0.9	0.1	0.2	0.2
	4	1.2	2.3	1.2	0.6	1.0	0.7	0.1	0.2	0.2
1.25 cm Typical 2K33 in 200-volt mode	1.6	4.8	7.9	5.0	2.8	3.4	3.0	1.4	1.8	1.5
	2	4.2	7.1	4.3	2.4	3.1	2.6	1.2	1.5	1.2
	3	3.2	5.7	3.3	1.7	2.3	1.9	0.8	1.0	0.9
	4	2.6	4.9	2.7	1.4	1.8	1.5	0.6	0.8	0.7

tion to 0.7 of the measured values, for the radar converter with a resonant TR cavity. The noise power at the half-power points has been reduced by an additional factor of two from the measured values of Tables 5·1 and 5·2, on the assumption that the coupling from the local oscillator to the crystal is set for 0.5 ma of crystal current at the center of the electronic tuning range and held fixed when the electronic tuning is changed.

For the 3.2-cm tube, the advantage of an intermediate frequency of 60 Mc/sec over one of 30 Mc/sec is small and can be easily lost because of increased i-f amplifier noise figure. At 1.25 cm an advantage of more than 1 db is obtained, and this is more than would be lost because of increased i-f amplifier noise figure. Even with the filtering effect of the TR cavity, however, the presence of the local-oscillator noise adds to the over-all receiver noise figure 2 to 3 db in the 3-cm band, and 4 to 5 db in the 1.25-cm band, with good i-f amplifiers and quiet crystals. It is therefore well worth the effort to try to find some method of further reducing the effect of local-oscillator noise on the over-all noise figure.

5·5. Reduction of Local-oscillator Noise by Resonant Filters.—The most direct method of removing the effect of local-oscillator noise would be to use a filter cavity in the local-oscillator circuit, similar to that used in the apparatus for measuring the noise temperature of crystals. Two difficult problems are met if this is done. First, the tuning of the receiver becomes much more complicated because the filter cavity and the local oscillator must be kept together, as the receiver is tuned by alteration of the local-oscillator frequency. If an AFC circuit is to be used it must include provision to track the cavity and the local oscillator automatically. The second problem involves the LO coupling circuit. As shown in Sec. 4·8, a cavity can be coupled to a local oscillator without producing frequency discontinuities, only if stringent conditions on the coupling are met. Either a large dissipative attenuation must be used between the oscillator and the cavity or the input coupling hole must be small. Both of these methods of avoiding frequency discontinuities result in considerable reduction in the output power of the cavity compared with that available from the oscillator. The prevention of interaction between the signal circuit and the local-oscillator circuit is a major problem in mixer design because the available local-oscillator power is limited. An additional reduction of available power has serious consequences on the design of the coupling circuit. It is obvious that the filter cavity cannot simply be placed between the local oscillator and any of the coupling circuits described in Chap. 3.

The tracking between the local-oscillator frequency and the cavity resonant frequency could be accomplished by use of an AFC circuit causing the local oscillator to be controlled at the cavity frequency,

similar to the beacon AFC circuits described n Chap. 7. With a thermally tuned oscillator such as the 2K45 or 2K50, this AFC circuit could cause the oscillator to track the cavity frequency over a wide band. A low-frequency component on the mixer-crystal current could be used to supply the error signal in the same way as in the beacon-cavity AFC schemes. The primary frequency control of the local oscillator wou'd then be the cavity-tuning control. With electromechanical devices, this control could be made to maintain the correct receiver frequency through a separate AFC channel operating from the i-f circuits. For a receiver designed to operate at a fixed absolute frequency, as is desired for beacon reception, the filter cavity would also be the frequency standard and no further automatic frequency control would be needed.

In Chap. 4 it was shown that the maximum value of the product of the loaded Q and the transmission efficiency compatible with the condition ensuring continuous operation of the oscillator, for a cavity with a given unloaded Q and for a given pulling figure for the oscillator, is obtained by the method of decoupling by adjustment of the cavity-load conditions, without dissipative attenuation. In the present case it is desired to obtain a loaded Q sufficient to reduce to a negligible level the noise power in the sidebands. The goal would be to make possible the use of a 30-Mc/sec intermediate frequency without a substantial contribution to the over-all noise figure from the local-oscillator noise. At 3·2 cm, a 10-db increase in the ratio of available local-oscillator power to available noise power in the sidebands would reduce the effect of the local-oscillator noise to less than 1 db under most circumstances. A selectivity great enough to give a 10-db increase in the ratio is obtained at 9000 Mc/sec with a cavity having a loaded Q of 450 or more. To be able to deliver 1 mw of local-oscillator power to the mixer, from a tube having an available power of 15 mw, the fractional transmission must be at least 0.067. If the cavity is operated with equal input and output loading and is decoupled from the oscillator by a dissipative attenuator, the maximum output power from the cavity, compatible with the condition for continuous oscillation is

$$r_1 T = \frac{2}{\left(\frac{2}{b\delta_0} - 3\right)},$$

from Eqs. (4·6) and (4·21). For a 2K25 or 723A/B oscillator, the value of b may be taken as 2.75×10^2, corresponding to the measurements quoted in Sec. 4·14. The maximum unloaded Q that can be used under these conditions is about 4800. The loaded Q resulting would be about 1600; thus the noise power in the 30-Mc/sec sidebands would be reduced by 21 db. This is sufficient attenuation of the noise sidebands but

provides only sufficient local-oscillator power to drive the crystal. Fortunately, the resonant nature of the cavity can be used to provide the decoupling of the signal circuit from the local-oscillator circuit. A circuit for a two-channel mixer such as that shown in Fig. 5·3 might be used. The attenuator should have a minimum attenuation of about 9 db, and it therefore provides a load of small reflection coefficient for the oscillator. Since the cavity is nonresonant at the signal frequency, the reflection of signal-frequency waves by the interaction of the cavity in the mixer is small and the cross attenuation from the radar mixer to the AFC mixer is large. For a larger safety factor in the available local-oscillator power in the radar mixer, a cavity of lower unloaded Q could be used and it would then be safe to use a smaller decoupling attenuation in the local-oscillator circuit. Since less dissipative attenuation is needed if the output loading of the cavity is increased and the input-circuit loading is decreased, somewhat larger available local-oscillator power could be obtained if the cavity were coupled in this way. An increase in the output loading and a decrease in the input loading, in the manner indicated by Eq. (4·12) would reduce the required amount of dissipative attenuation sufficiently to more than compensate for the decreased transmission efficiency of the cavity circuit. This, however, could be done only at some sacrifice in loaded Q, and thus in suppression of the local-oscillator noise. A combination of a higher unloaded Q and unequal input and output loading would give the desired result without a decrease in noise suppression.

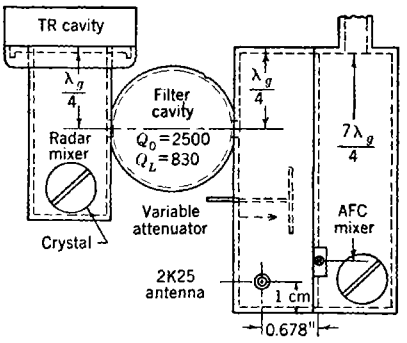

FIG. 5·3.—Double mixer with cavity filter for LO noise.

5·6. Reduction of Local-oscillator Noise by the Use of a Cavity as Part of the Oscillator Tank Circuit.—Another method by which a cavity could be used to decrease the power in the noise sidebands of the local-oscillator signal is to use the cavity as a part of the tank circuit of the oscillator. It was shown in Sec. 4·11 that a cavity load circuit on an oscillator can give frequency stabilization of the oscillator, if the line length between the cavity and the grids of the oscillator resonator is effectively an integral number of half wavelengths. For very close coupling between the oscillator and the cavity, the tuning of the oscillator is discontinuous in frequency but oscillation at the resonant frequency of the external cavity is stable. This condition amounts to a substitution

of the external cavity for the tank circuit of the oscillator and a consequent oscillator-resonator Q determined primarily by the external cavity. Tuning of the oscillator can be accomplished directly by tuning the external cavity. Since the best control of the oscillator frequency by the external cavity results if the external cavity has the highest possible unloaded Q, the filtering of local-oscillator noise sidebands is effective.

This method is rather difficult to apply because the locking of the oscillator frequency to that of the cavity is critically dependent on the length of the line between the cavity and the oscillator. Because this line has some dissipative loss, there is a limit to the magnitude of susceptance that can be developed by the external cavity at the grids of the oscillator resonator. This maximum susceptance sets a limit on the frequency range over which the oscillator can be pulled by the external cavity without retuning of the oscillator resonator. If the oscillator resonator is retuned, there is a limit on the range of frequency for which a fixed length of line between the oscillator and the external cavity will give the desired frequency control by the external cavity. This limit is determined by the rate of change of the effective electrical line length with frequency, and must thus depend upon the number of half wavelengths of line used. For the largest tuning range, the smallest possible number of half wavelengths of line must be used, and reflections increasing the dissipative loss or the frequency-sensitivity of the line must be avoided. With 2K25 oscillator tubes, which have a coaxial output line several half wavelengths long, a fixed length of line between the oscillator and the external cavity can be used for only a small frequency range—perhaps 2 per cent. The oscillator can be tuned, by means of the external cavity alone, through a range of about 1 per cent if the cavity has an unloaded Q of 25,000.

Because of the variation, among tubes, in the electrical length of the output line, a given external circuit, containing a fixed line length between the tube antenna and the cavity, does not give frequency control by the external cavity over the same range for all tubes. This variation causes one of the principal difficulties in setting up the circuit, since it necessitates a variable antenna-to-cavity line length. For each tube this line must be adjusted to allow control by the external cavity over the desired range. Another difficulty encountered in setting up a circuit of this kind lies in the fact that, although the oscillator, when it has been locked to the cavity, can be tuned over a considerable range by tuning of the external cavity alone, the range of oscillator tuning for which locking can be produced is very small. A monitoring circuit is required to make sure that locking has occurred.

Oscillators locked to cavities in this way have been used in the 10-cm

band for the stabilization of frequency. With a 2K28 tube, a single half-wavelength line between the oscillator cavity and the external cavity can be used. The operation is considerably more satisfactory than that obtained at 3.2 cm with 2K25 tubes, because of this short line length. This method is not useful in decreasing the over-all noise figure of a 10-cm receiver because, with a 30-Mc/sec intermediate frequency, local-oscillator noise contributes a negligible amount to the over-all noise figure. When used with a very high-Q cavity, such as a resonant echo box, however, it is useful as a frequency-stabilization circuit.

In the 1.25-cm band, only enough experimentation has been done with this kind of circuit to show that locking can be obtained and that frequency control by the external cavity can give tuning over 100 or 200 Mc/sec. With the 2K33 tube, with its special double-resonator circuit,

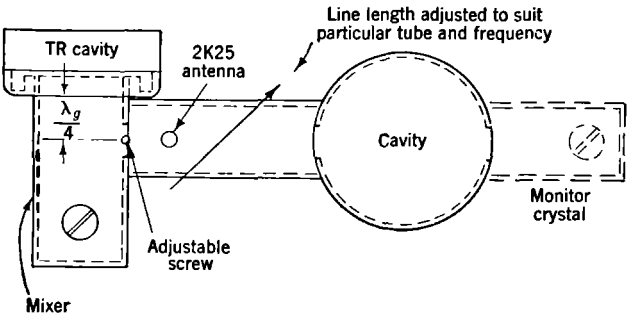

FIG. 5·4.—Circuit for the use of a 2K25 oscillator locked to an external cavity for LO noise suppression.

difficulties are again encountered because the same external line length does not give control over the same frequency range for various tubes. For the purposes of LO-noise suppression and of frequency stabilization, this circuit offers much in the way of simplicity. It may in the future be developed to the point of being practicable from an operational viewpoint, especially if the high-Q cavity and coupling circuit are included as parts of the tube. So far, however, it has not been developed to the point of being usable in a receiver intended for field use in the wavelength regions below 10 cm. A tube incorporating a high-Q resonator in this way loses the very useful property of electronic tuning, through the frequency-stabilization effect, and the tuning mechanism must produce a dimensional change in the high-Q cavity.

In Figs. 5·4 and 5·5 are shown two possible 3.2-cm mixer circuits incorporating this type of circuit for the suppression of local-oscillator noise and for frequency stabilization. The circuit of Fig. 5·4 provides for the extraction of local-oscillator power for the mixer through a variable coupling iris in what would normally be a short-circuiting end

wall of the waveguide behind the oscillator antenna. This iris must be about one-quarter wavelength behind the antenna, to allow the antenna-to-waveguide coupling to operate efficiently. A large standing-wave ratio may exist in the line between the cavity and the oscillator, however, especially under the condition that the external cavity causes a considerable pulling of the normal oscillator frequency. At a given iris setting, the efficiency of the coupling of local-oscillator signal into the mixer is greatest when a voltage loop of the standing-wave pattern occurs at the antenna, and would be zero if a voltage node were to occur there. The amount of power coupled into the mixer for a given iris setting would therefore vary considerably, depending upon the amount of pulling by the external cavity and upon the cavity-to-antenna line length.

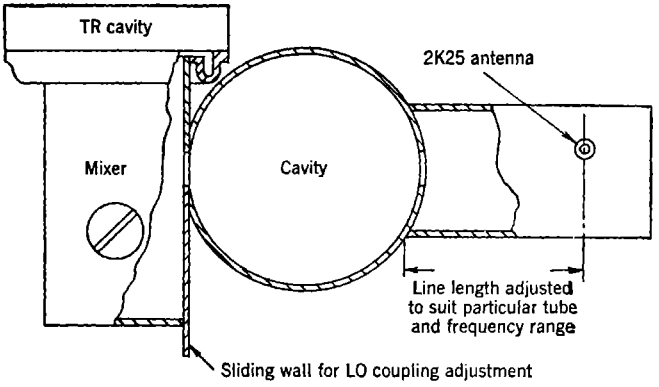

FIG. 5·5.—Cavity used as frequency control and source of local-oscillator power of the mixer, for the purpose of LO-noise suppression.

If a voltage node occurs near the antenna, the iris must be adjusted for large coupling between the local-oscillator circuit and the signal circuit, with consequent reflection of received signal power. No provision is included to show when the circuit is adjusted in such a way that the local oscillator is locked to the cavity. Such a provision could be made by coupling a separate detector crystal to the cavity as indicated by the broken lines in Fig. 5·4. Transmission through the cavity to this crystal would indicate oscillation at the resonant frequency of the cavity.

In the circuit of Fig. 5·5 the cavity itself is used as the source of local-oscillator signal for the mixer. Since the cavity must be tightly coupled to the oscillator, a large amount of energy is stored in the cavity and the coupling to the mixer may be small. To accomplish adjustment of the coupling to the mixer crystal a variable exit iris must be used on the cavity and for this a sliding spring-metal wall between the waveguide and the cavity can be used. Transmission of power through the cavity to the mixer crystal, with consequent production of rectified current by

the mixer crystal, serves to indicate that the oscillator is locked in frequency to the cavity. The adjustment procedure, however, is complicated by the fact that no indication of oscillation is provided when the oscillator is not locked to the cavity.

Neither of these circuits has been developed to the point of being practical for use in receivers. They have been included here only to show some of the difficulties that are encountered with this kind of noise-suppression circuit and the direction in which one might proceed. If an oscillator containing a built-in high-Q cavity were available, the mixer problem would be simpler. A separate output line from the resonator of the oscillator would provide the useful power and this line would be coupled into a mixer circuit in any of the conventional ways. The frequency-stabilized 10-cm oscillators earlier referred to were used in this way; one output loop was used to couple the oscillator tightly to the high-Q cavity and a second to derive the useful power. For the present, however, the use of these circuits for LO-noise suppression has been abandoned in favor of the more foolproof "balanced" mixer described in Chap. 6.

5·7. Effect of D-c Bias on the Mixer Crystal.—A slight improvement in over-all receiver noise figure can be obtained through the use of a small bias voltage across the mixer crystal, if local-oscillator noise is present. The effect of the bias voltage is to make the conversion loss at a reduced local-oscillator level almost as small as that at the normal level. Since the noise sidebands are proportionately reduced, an improvement in over-all noise figure results. Several additional advantages can be gained through the use of such a bias voltage. Accompanying the reduced LO power requirement is a reduction in the reaction of the local-oscillator circuit on the signal circuit of the mixer. The over-all noise figure becomes less dependent upon the amount of incident local-oscillator power at the crystal, because the conversion loss does not increase so rapidly as the local-oscillator drive is decreased. Finally, the i-f conductance of the crystal is less dependent on the amount of local-oscillator drive.

Figure 5·6 is a graphical illustration of how the conversion loss would be affected by a positive bias, if the d-c characteristic determined the behavior of a crystal used in a microwave mixer. For the conditions illustrated in Fig. 5·6*a*, the local-oscillator drive has been taken as less than enough to drive the crystal to the part of the forward characteristic having the greatest slope. The addition of a positive bias (Fig. 5·6*b*) increases the i-f current because the positive peaks of the envelope drive the crystal to a region in which the characteristic has a greater slope than before, whereas there is little change in the slope of the characteristic in the negative part of the envelope. There is an optimum

bias voltage for each local-oscillator level since a further increase in bias voltage would cause the negative part of the envelope to contribute an i-f current of increasing magnitude with increasing bias voltage. When this current increases more rapidly than that due to the positive part of the envelope, the total i-f current begins to drop, because the current contributed by the negative part of the envelope has the opposite phase to that from the positive part. The smallest conversion loss for a particular local-oscillator amplitude usually results from the use of a bias voltage less than the amplitude of the local-oscillator signal.

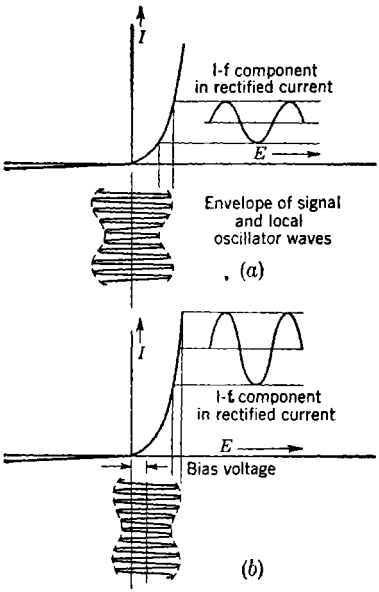

FIG. 5·6.—Graphical illustration of decrease in conversion loss with positive bias, for small local-oscillator level. The barrier capacitance is neglected.

One method of demonstrating the effect of a bias voltage is to measure the effective over-all noise figure of a representative receiver with various values of local-oscillator coupling and of d-c bias. Such a measurement is made by finding the available c-w input signal power required to give an output signal power equal to the output noise power, when the signal frequency is at the point of maximum sensitivity in the pass band. The effective over-all noise figure is the ratio of this signal power to kTB, where B is the effective noise bandwidth of the i-f amplifier. For relative noise-figure measurements, provided B is not changed by the parameters varied between measurements, it is not necessary to know B or the absolute power level. Thus, to demonstrate the effect of bias voltage on the crystal it is not necessary to have an absolute calibration of the available signal-generator power. A block diagram of a circuit for measuring the over-all noise figure is shown in Fig. 5·7. The attenuator associated with the signal generator is made to match the transmission line. A TR cavity tuned to the signal-generator frequency is used, and a mixer with iris-coupled local oscillator. A part of the input circuit of the i-f amplifier is shown to illustrate the method of applying a bias voltage through the crystal-current metering circuit. The circuit shown is only symbolic, in the sense that a practical circuit includes, instead of the simple condenser filter on the crystal-current lead,

a low-pass π-filter of two or three sections, made up of r-f chokes and condensers. The bias voltage is supplied from a battery and voltage-divider circuit. The best values of the battery voltage and of the resistance of the potentiometer circuit, for experimental purposes, should be such that the series resistance introduced into the crystal-current circuit, for a bias voltage of one volt, is small compared with the resistance of the crystal. For a resistance of 50 ohms per volt, the negative bias, at 1 ma of rectified current, produced by the flow of the rectified crystal current through the potentiometer would be equal to 0.05 volts, a negligible quantity compared with the forward bias applied by the

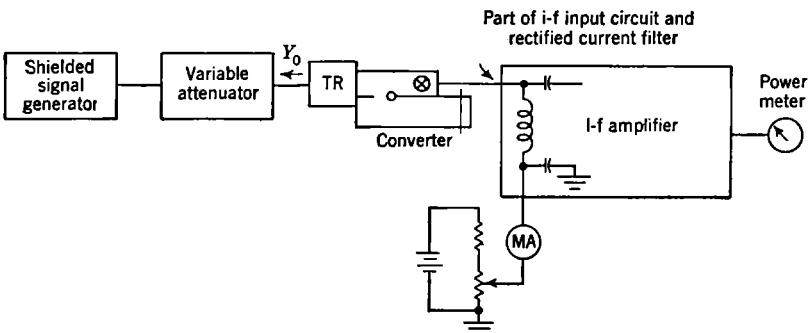

FIG. 5·7.—Circuit for measuring the effect of crystal bias on over-all noise figure.

battery circuit. The output power meter may be a thermocouple or a square-law crystal detector with a milliammeter.

5.8. Results of Experiments on the Effect of D-c Bias.—The results of some experiments of the kind just described are plotted in Fig. 5·8. These data were taken on a 1N23 crystal having a measured conversion loss of 7.9 db and a noise temperature of 1.9. The noise figure of the i-f amplifier was about 5 db for crystals having average i-f admittance. In this figure a curve of relative over-all noise figure as a function of crystal current due to the local oscillator alone (with the bias voltage set at zero) is given. The minimum of this curve is taken as the zero point, and an increase in noise figure from this corresponds to an ordinate below this point, a convention used since minimum noise figure is desired. There is a set of curves each having its right-hand terminus lying on the curve for no bias. Each of these curves gives the relative over-all noise figure for constant total crystal current equal to that corresponding to the abscissa of the right-hand terminus point and made up of rectified current and current due to the bias voltage in varying proportions. The abscissa gives, for these curves, the crystal current due to the oscillator alone. As the curve is traversed toward the left, the bias voltage is

continuously increased, to keep the total current constant. The curves show that for any total current there is very little deterioration, and for most currents some improvement, if that current is produced by smaller local-oscillator drive and some bias, than if it is all produced by the local oscillator. The improvement possible varies considerably from crystal

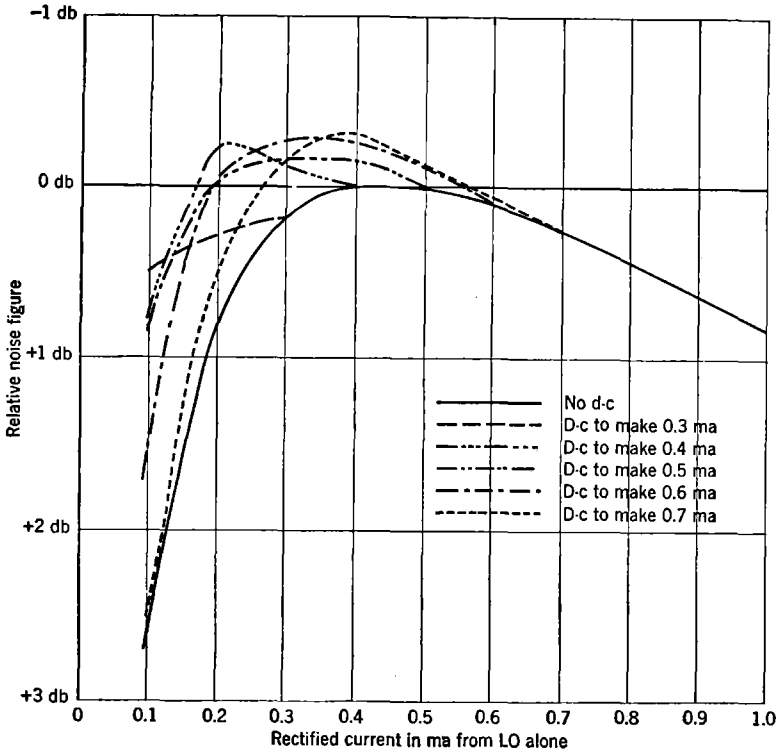

FIG. 5·8.—Effect, on over-all receiver noise figure, of a positive bias on the crystal. The data are for a 1N23 crystal with 7.9-db conversion loss and a noise temperature of 1.9.

to crystal and data on about 10 crystals showed that as much as 0.5 db improvement may be gained or as little as 0.1 db. The best noise figure was obtained in most cases with an amount of local-oscillator drive equal to that which gave minimum noise figure without bias, and with enough bias added to increase the crystal current by a factor between 1.5 and 2. Almost as good results are found with bias at about half the normal local-oscillator drive.

The conclusions that can be drawn from these experiments are restricted because there are many parameters that change with local-

oscillator drive which were not measured. For instance, the r-f admittance of the crystal to the signal is affected by a change in either the bias voltage or the local-oscillator drive, and this could contribute to the variation in the over-all noise figure. To eliminate this the mixer should have been tunable and adjusted for minimum noise figure for each point. Another source of error lies in the use of a fixed coupling circuit from the crystal to the i-f amplifier. Since the i-f admittance of the crystal depends upon the local-oscillator drive and the bias voltage, the effective noise figure of the i-f amplifier varies from point to point. Thus the only thing that this experiment does show is that for this combination of crystal, mixer and i-f amplifier, some improvement in the over-all noise figure can be obtained through the use of forward bias on the crystal. Of greater significance may be the fact that the range over which the local-oscillator drive can vary without a large increase in effective over-all noise figure is increased by the use of the optimum

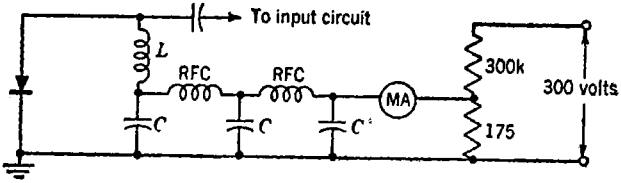

FIG. 5·9.—Circuit for adding bias voltage to mixer crystal.

bias for each value of the local-oscillator drive. The noise figure can be kept near its minimum value with a much smaller local-oscillator drive with the addition of an appropriate bias voltage than without bias.

To utilize this extension in the allowable range of local-oscillator drive, a fixed bias circuit has sometimes been added to the microwave receiver. Such a bias circuit is shown in Fig. 5·9. The bias voltage applied in the absence of rectified crystal current is 0.175 volts, due to the 1-ma current through the voltage divider. With increasing local-oscillator drive, the bias voltage decreases because the rectified current flows in the opposite direction through the 175-ohm resistor and thus decreases the voltage drop across it. At 1 ma of rectified current the bias voltage is zero. Thus the bias voltage is significant primarily for small local-oscillator drive, where it has the most beneficial effect.

To evaluate completely the usefulness of the bias voltage, measurements should be made separately of the loss, noise temperature, and i-f admittance of the crystal. The data just quoted, showing a slight improvement in over-all noise figure from an added bias when the local-oscillator drive is optimum, could be explained by a decrease in the conversion loss from the addition of the bias voltage. The same decrease in conversion loss could be achieved with greater local-oscillator drive but

the increase of converted local-oscillator noise apparently results in a poorer noise figure. The advantage of increased permissable range of local-oscillator drive lies in the possibility of obtaining a large electronic-tuning range from the oscillator for AFC purposes. The addition of bias voltage by the circuit of Fig. 5·9 allows the tuning to be carried to a lower-power point in the reflector mode than without the bias. Some experiments were made to measure the over-all noise figure over the

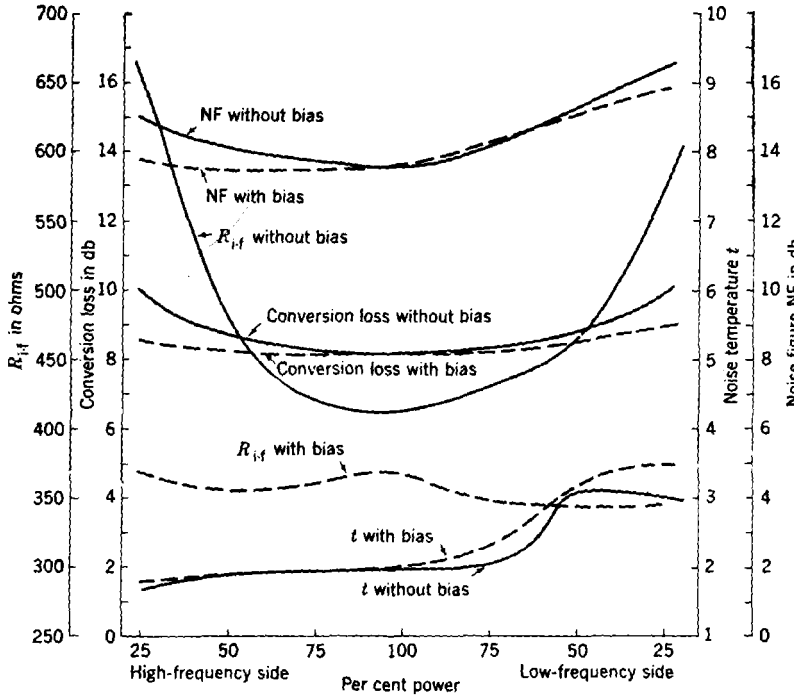

FIG. 5·10.—Effect of bias circuit of Fig. 5·9 on the conversion loss, noise temperature, i-f resistance, and over-all receiver noise figure as the local oscillator is electronically tuned through a reflector mode. The crystal is a 1N23A, the LO tube a 723A/B, the intermediate frequency 30 Mc/sec, and the effective i-f noise figure 4 db. Bias voltage is supplied from the circuit of Fig. 5·9.

range of electronic tuning, with and without bias. The bias circuit was that of Fig. 5·9 and independent measurements of loss, noise temperature, and i-f resistance of the crystal were made. The apparatus was similar to the noise-temperature test set in that it included the one-eighth-wavelength-line matching transformer between the crystal and the i-f amplifier. This made the measurement of the crystal noise temperature independent of the i-f resistance of the crystal. A noise diode was used to calibrate the apparatus and to measure the i-f resistance. With the noise diode, the

diode current required to produce a given deflection on the output meter was measured with each of several resistances substituted for the crystal. When the crystal was in place and operating with the same amplifier gain, the diode current required to give noise sufficient to produce this same deflection was thus a measure of the i-f resistance of the crystal. The conversion loss was measured by use of a calibrated low-level signal generator. The i-f output power from the crystal was found by use of the noise power from the noise diode as a standard of reference, since the i-f resistance of the crystal was known. The i-f amplifier and output meter could thus be regarded as a calibrated low-level i-f power meter.

The results of this experiment are shown in curves of Fig. 5·10. At the center of the electronic tuning range, the crystal used showed no improvement in over-all noise figure due to the bias when the rectified current was 0.5 ma. The over-all noise figure plotted is calculated from the loss and noise temperature assuming an effective i-f amplifier noise figure of 4 db. At the quarter-power points in the electronic-tuning range, however, some improvement is found. A crystal current of 0.125 ma would result there without bias. With the tube tuned to the quarter-power point on the high-frequency side of the center of the electronic-tuning range, the noise figure is improved by 1.2 db by the addition of the bias and is almost the same as at the center of the mode. This is almost completely accounted for by the decrease in conversion loss due to the bias, since the local-oscillator noise is almost constant in the high-frequency part of the electronic-tuning range. On the low-frequency side the improvement in noise figure is not so great, however, because, although the conversion loss is decreased by the same amount by the addition of the bias voltage, the local-oscillator noise is so large that its effect increases significantly with the decreased conversion loss. The bias current must also contribute to the noise temperature somewhat but this is apparently small compared with the converted local-oscillator noise. Since the crystal used for this experiment had a noise-temperature of only 1.3, for about 1 ma of rectified current, small effect due to the bias current would be expected.

The most marked effect of the bias voltage in Fig. 5·10 is the change in i-f resistance. Whereas without bias the resistance rose from about 400 ohms to over 650 ohms when the local-oscillator drive was decreased by a factor of 4, with bias the i-f resistance was between 340 and 370 ohms for the whole range of local-oscillator drive. If the i-f amplifier to be used in a receiver were sensitive to the i-f resistance of the crystal, with respect either to noise figure or to bandpass characteristics, a bias-voltage circuit would be of considerable value. Provided the image-frequency wave is not reflected to the crystal, however, the bias voltage makes little difference in the percentage spread of crystal resistances

encountered for various crystals at a fixed local-oscillator level. However, if the image-frequency wave is reflected to the crystal, by a TR cavity for instance, the situation is much more complicated because the i-f impedance varies in both resistive and reactive parts, from crystal to crystal, as discussed in Chap. 2. A bias voltage would probably change the relative spread of impedances very little.

Both of the experiments just described were made at 3.2 cm with a 30-Mc/sec intermediate frequency. At 1.25 cm where the local-oscillator noise is somewhat greater, a larger improvement might be gained through the use of positive bias. No very reliable data have been taken to find out how much the improvement might be, largely because the balanced mixer was introduced as a good solution to the problem of local-oscillator noise. Since the balanced mixer has several other advantages besides that of the suppression of local-oscillator noise, it is often worth using, even if other methods of noise suppression are sufficient. A discussion of the balanced mixer is to be found in Chap. 6.

In a receiver using bias voltage on the crystal, it is desirable to provide the usual meter for the rectified crystal current to facilitate adjustment of the local-oscillator coupling. The bias voltage alone produces a rather small crystal current but when a small amount of local-oscillator power is added, the crystal current increases by a considerably larger amount than it would without the bias voltage. For the purpose of setting the LO power level, it has been considered advantageous to use a meter jack or switch which short-circuits the bias voltage when the meter is put into the circuit, so that the crystal-current reading is approximately proportional to the local-oscillator power incident on the crystal. The jack also allows one side of the meter to be grounded, which simplifies the wiring.

CHAPTER 6

BALANCED MIXERS

The complexity of design and of operation of mixer circuits in which filter cavities are used for the suppression of local-oscillator noise has led to considerable interest in the development of a microwave balanced mixer. A balanced mixer utilizes two separate mixer units driven in shunt by the local-oscillator signal and in push-pull by the received signal, or vice versa. This results in a balanced push-pull output signal at the intermediate frequency, and the i-f amplifier input circuit is designed to give response only to such a balanced signal. Any i-f output signals derived from noise accompanying the local-oscillator power appear in the same phase at the output terminals of each mixer unit and are therefore discriminated against by the input circuits of the push-pull i-f amplifier. The suppression of local-oscillator noise is thus obtained without resort to frequency-selective circuits. The operational complexity of the balanced mixer is no greater, and is in many respects less, than that of a simple mixer. The many additional properties of the microwave balanced mixer in its final form make it often advantageous even when the suppression of local-oscillator noise is not required.

6·1. Simple Microwave Balanced Mixer.—Figure 6·1 is a schematic drawing of a microwave balanced mixer. If it is assumed that the crystals may be treated as resistors across the microwave line and that the local-oscillator power can be introduced into the microwave line by a simple, very loosely coupled probe, it is seen that this circuit behaves as a balanced mixer. The TR cavity is assumed to present, in the plane of its exit iris, a short circuit to power at the local-oscillator frequency. Each crystal is therefore coupled to the local oscillator in the same way, and since the probe excites waves traveling in both directions and having the same phase at planes equidistant from the probe, the local-oscillator signals at the two crystals are in phase. The received signal, on the other hand, having passed through the TR cavity, arrives at the two crystals in opposite phase since the crystals are spaced a half wavelength apart. A consideration of the simple addition of a small signal wave and a large local-oscillator wave will show that the amplitude-modulation component at the beat frequency, in the envelope of the sum of these two waves, reverses in phase if the relative phases between the local-oscillator wave and the signal wave are reversed. Thus the i-f voltages at the output terminals of the two crystals are opposite in phase. By means of the

transformer, the push-pull i-f signal is changed into a signal that can be used to excite a conventional unbalanced line or an i-f amplifier.

The local-oscillator noise arrives at the two crystals through the same circuit as does the local-oscillator signal. The relative phases between the noise components and the local-oscillator wave are the same at the two crystals, and therefore the noise converted to the intermediate frequency has the same phase at the output terminals of the two crystals. The balanced transformer does not produce an output voltage from equal voltages in the same phase in the two legs of its input circuit, and thus the converted noise is not coupled into the i-f amplifier. The over-all noise figure is determined by the conversion loss of the balanced mixer, its noise temperature and the noise figure of the i-f amplifier, without a contribution from local-oscillator noise. If the two crystals have the same conversion loss in a simple mixer circuit, the conversion loss in the balanced mixer is the same as that of a single crystal. Only half the r-f signal power is applied to each crystal. The available i-f output power from each crystal is therefore only half what it would be for an unbalanced mixer, but since the two powers are added, the over-all conversion loss is that of a single crystal. The noise temperature associated with the output admittance of the push-pull transformer is just that of a single crystal, provided the two crystals have identical noise temperatures. The advantage gained by this balanced mixer, therefore, is the suppression of local-oscillator noise, and nothing is lost.

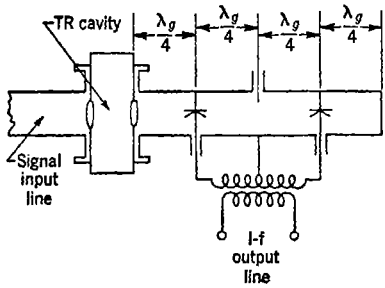

FIG. 6·1.—Simple balanced mixer with push-pull i-f transformer to unbalanced line.

The degree to which local-oscillator noise is suppressed depends upon how closely identical are the converted i-f noise components at the output terminals of the two crystals. This is determined partially by the degree to which the two crystals have identical conversion losses. Since the available output power from the i-f transformer is proportional to the square of the difference between the voltages produced by the two crystals, a small difference in conversion loss does not destroy the suppression of local-oscillator noise. If the two crystals have conversion losses L_1 and L_2 respectively, the available i-f signal power is proportional to $(\sqrt{L_1} + \sqrt{L_2})^2$ whereas the available converted LO noise power is proportional to $(\sqrt{L_1} - \sqrt{L_2})^2$. The factor by which the local-oscillator noise is suppressed, relative to the signal, is

$$(\sqrt{L_1} + \sqrt{L_2})^2/(\sqrt{L_1} - \sqrt{L_2})^2.$$

If $L_1 = 2L_2$, corresponding to a 3-db difference, the local-oscillator noise is suppressed by a factor of 34, or by 15.3 db. This factor is sufficient to reduce the effect of the unbalanced noise on the over-all noise figure to a negligible amount under most conditions; therefore an unbalance in conversion loss as great as 3 db could be tolerated, if this were the only source of unbalance in the circuit.

A much more serious source of unbalance in this mixer circuit arises from the possible inequality of the r-f admittances of the crystals. The power delivered to the crystals, both by the signal generator and by the local oscillator, is divided between the crystals in a ratio dependent upon their r-f admittances. To the signal, the two crystals appear in parallel so that the ratio of the signal powers delivered to them is just the ratio of their r-f conductances, the crystal having the larger conductance receiving the larger power. To the local oscillator, the crystals appear at the ends of quarter-wavelength lines and these lines are connected in parallel at the plane of the local-oscillator probe. If the r-f admittances of the crystals were pure conductances, the ratio of local-oscillator power delivered to the two crystals would be the inverse of the ratio of their conductances; that is, the crystal having the smaller conductance would receive the larger local-oscillator power. Since the r-f admittances of representative crystals of a given type vary considerably, it is not unlikely that randomly chosen crystals might differ in conductance by a factor as large as 4. For example, a pair of crystals having admittances of $2Y_0$ and $Y_0/2$, respectively, would differ by this factor, and since each would suffer a reflection loss of only about 0.5 db in the conversion-loss test, they would not necessarily be eliminated by the specifications. This source of unbalance can be equivalent to 6 db or more of unbalance in output power. When this unbalance is added to the possible unbalance in conversion loss, it is seen that the suppression of local-oscillator noise might not be sufficient unless crystals were selected in balanced pairs. Such a selection would best be made on the basis of measurements of r-f admittance, since the admittance is seen to be the more serious source of unbalance. A mixer that requires selection of crystals is certainly to be avoided if possible. For the purpose of providing a balanced mixer that is less sensitive to inequalities of the r-f admittances of the crystals, the "magic T" was developed. To facilitate the discussion of balanced mixers based on this circuit, a short discussion of the principles of the magic T and some of its equivalent circuits must be given.

6·2. General Properties of the Magic T.—One variety of magic T in rectangular waveguide is a circuit consisting of a waveguide with two other waveguides connected perpendicularly to it, one in the broad wall and the other in the narrow wall, at a common junction plane. Each of the joining waveguides makes, with the original waveguide, an ordinary

T-junction. The structure formed by the branch in the broad side of the main waveguide and the main waveguide is called an E-plane T-junction, and behaves essentially as a series-connected circuit. The arm in the narrow plane constitutes, with the main waveguide, an H-plane T-junction and can be described in terms of a parallel circuit. When both these side arms are present, and have a common junction plane, as in the magic T, the arms on the narrow side and on the broad side of the main waveguide are often referred to as the H-plane and the E-plane arms, respectively. The complete structure has some very special properties, however, because of its symmetry, and no simple series- or parallel-connected equivalent circuit can be used to describe it. In Fig. 6·2 a perspective view of the structure of a magic T is shown.

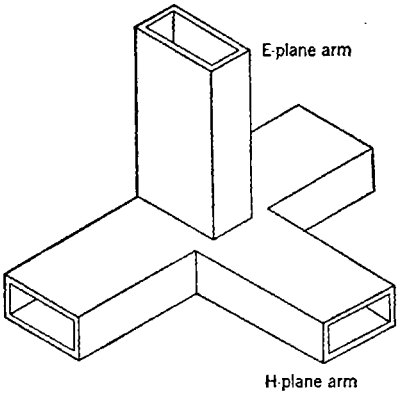

FIG. 6·2.—Perspective view of magic T.

To understand the special properties of the magic T it is necessary to realize the difference between the coupling of the H-plane T-junction and that of the E-plane T-junction. In Fig. 6·3a and b are shown, respectively, the field configurations in the region of the junction for each

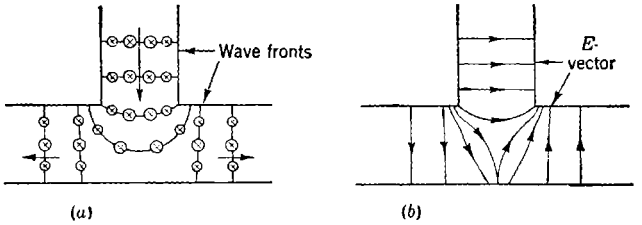

FIG. 6·3.—Representation of coupling in simple T-junctions; (a) H-plane T-junction; (b) E-plane T-junction.

of these simple T-structures, produced by a wave traveling into the side arm of each. Lines are drawn, in Fig. 6·3a, to represent the wavefront as it progresses down the side arm and through the junction. The circles with crosses represent the E-vector pointing into the paper. It is seen that the waves traveling outward from the junction have the same phase at planes equidistant from the center of the junction, or from the plane of symmetry. In Fig. 6·3b, which represents the E-plane T-junction, the electric field vector is in the plane of the paper and is

represented by lines with arrows indicating the direction. The electric field fringes at the junction and excites the horizontal arms with waves having opposite phases at planes equidistant from the plane of symmetry. Thus the waves in the horizontal arms of the H-plane T-junction may be said to possess completely even symmetry about the junction and those in the E-plane T-junction to possess completely odd symmetry about the junction. Another way of illustrating the action of the H-plane T-junction is to draw the magnetic field vector, which fringes at the junction. The magnetic field has opposite directions at symmetrically disposed planes in the horizontal arms, but, since the waves are traveling in opposite directions, the associated electric fields must point in the same direction, as shown, at these two planes. In both of these T-structures, with each of the horizontal arms infinite in length, there would be a wave reflected upward in the side arm due to the discontinuity of the junction.

The same kind of coupling exists between the side arms and the collinear arms of the four-armed structure of Fig. 6·2. Because of the opposite kinds of symmetry associated with the side arms it is evident that a wave traveling into the E-plane arm excites only a wave of odd symmetry in the junction and cannot therefore excite the H-plane arm. The result is that only waves having opposite phases at planes equidistant from the plane of symmetry are excited in the collinear arms, and a reflected wave is excited in the E-plane arm. Similarly, a wave sent into the H-plane arm excites, in the collinear arms, only waves having like phases at planes equidistant from the plane of symmetry and excites a reflected wave in the H-plane arm. There results, therefore, a device that transmits power to two lines from each of two independent input lines but shows no direct coupling between these input lines.

In order that the magic T may be most useful, the input arms should have no reflections when nonreflecting terminations are placed on the collinear arms. Some kind of reflecting irises in the E-plane and the H-plane arms can be provided to produce reflections that cancel the reflections from the junction. These arms of the T-junction will then be reflectionless when the collinear arms are terminated with reflectionless loads. Provided the matching structures do not upset the symmetry of the junction, the lack of direct coupling between the E-plane and the H-plane arms is preserved.

Under the condition that such matching devices are used, the T-structure takes on other special properties. Suppose that waves of equal amplitudes are sent simultaneously into the E-plane and the H-plane arms. Because of the odd and even symmetry, respectively, of the waves excited in the collinear arms, the relative phases between the two input waves can be so adjusted that the secondary waves excited

in one of the collinear arms cancel. Then the secondary waves in the other collinear arm are in phase and therefore add in amplitude. Thus the total power contained in the waves sent into the E-plane and the H-plane arms is contained in the wave traveling outward in one of the collinear arms. A reversal in the direction of propagation of these waves then shows that a wave sent into one of the collinear arms excites waves of equal amplitudes in the E-plane and the H-plane arms, and does not suffer reflection at the junction, nor does it couple to the opposite collinear arm. The same is true for a wave sent into the other collinear arm. If planes are chosen in the E-plane and H-plane arms in such a way that the waves traveling outward in these arms, excited by a wave sent into one of the collinear arms, have like phases, the waves due to power entering the other collinear arm have opposite phases. Thus, with the matching devices in the E-plane and the H-plane arms, the structure has the property that power sent into any arm transmits only to the adjacent arms, and does so without reflection. Furthermore, the waves excited in these adjacent arms have the opposite kind of phase symmetry if the input wave is sent into the arm opposite to the original one. It is to this structure, including the matching irises, that the term magic T is applied.

6·3. The Matching of the Magic T.—Any of the conventional kinds of matching structures may be used in the magic T at a single frequency. It has been found, however, that with inductive irises the frequency band over which the match is good is not large. This is especially true of the H-plane arm, where the voltage standing-wave ratio to be matched out by the iris is larger than in the E-plane arm. At 3.33 cm in waveguide having outside dimensions of 1 in. by $\frac{1}{2}$ in., the voltage standing-wave ratio that must be matched out is about 3.6 in the H-plane arm and 2.2 in the E-plane arm. In the 1.25-cm band with $\frac{1}{2}$-in. by $\frac{1}{4}$-in. waveguide, it is about 7.5 in the H-plane arm and 2.8 in the E-plane arm. With an inductive iris placed as close as possible to the junction in the proper position to match the H-plane arm at a given frequency, the voltage standing-wave ratio rises to about 2 with a change of frequency of less than 1 per cent.

A structure giving a less frequency-sensitive matching effect for the H-plane branch has been found. In the $\frac{1}{2}$- by $\frac{1}{4}$-in. waveguide used at 1.25 cm an iris in the plane of symmetry extending outward from the wall opposite the H-plane arm and upward into the E-plane arm has been used. This and an asymmetrical inductive iris for matching the E-plane arm are shown in Fig. 6·4. The voltage standing-wave ratio, with nonreflecting loads on the collinear arms, is less than 1.10 over a plus or minus 1 per cent band, in the H-plane branch. In the E-plane branch the voltage standing-wave ratio is less than 1.10 at the center of the band

and rises to about 1.30 at the edges of the plus and minus 1 per cent band.

For the 3.33-cm band, a post was found to give a better match, over a wide band, than an iris of this kind, although a similar iris in the plane

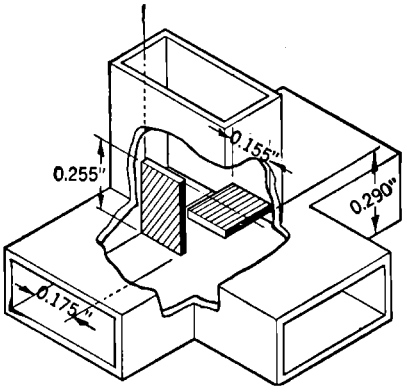

FIG. 6·4.—Positions of irises for matching a magic T in ½-in. by ¼-in. waveguide. The iris thickness is 0.020 in.

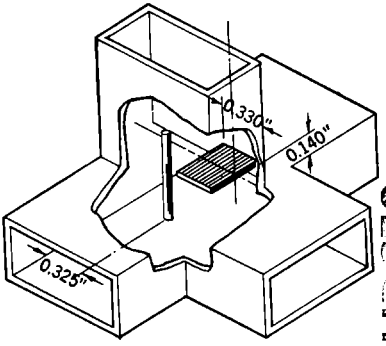

FIG. 6·5.—Positions of post and iris for matching a magic T in ½-in. by ¼-in. waveguide. The iris thickness is $\frac{1}{32}$ in., the diameter of the post is ⅛ in., and the length is 0.650 in.

of symmetry could be designed to give a perfect match at a single frequency. This post, again with the single asymmetrical inductive iris for matching the E-plane branch, is shown in Fig. 6·5. The voltage standing-wave ratio observed in the 12 per cent band from 3.13 to 3.53 cm, for a magic T like that of Fig. 6·5, is shown in Fig. 6·6. It is evident there that the match obtained in the H-plane arm is almost independent of frequency. Unfortunately no simple structure was found that gave a wideband match for the E-plane branch. The voltage standing-wave ratio measured in the collinear arm is also shown. The amount of this standing-wave ratio depends on the other two but cannot be derived from them without knowledge of the phases of the reflection coefficients.

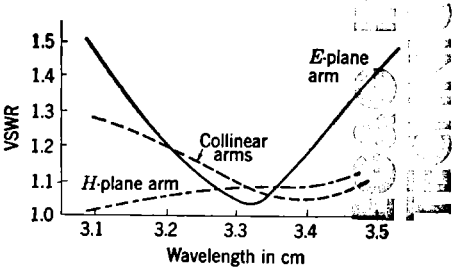

FIG. 6·6.—Voltage standing-wave ratio vs. wavelength, for magic T matched as shown in Fig. 6·5.

Because of the complete symmetry of the magic T, the symbols shown in Fig. 6·7a and b are used in illustrating its applications. The arms are numbered in a definite relationship to the physical structure, because for many applications it is necessary to know the phase relationships

between the waves in two opposing arms and not in the other two. In such cases, the collinear arms are favored over the other two since the phase relationships between waves in them are completely defined by the symmetry of the structure. The lack of direct coupling between the H-plane and the E-plane arms (henceforth arms (3) and (4), respectively) is independent of frequency, but for arms (1) and (2) it is independent of frequency only to the extent that the matching of arms (3) and (4) is independent of frequency. Measurements could be made to determine the location of planes in arms (3) and (4) for which phase relationships similar to those holding for arms (1) and (2) could be specified, but the positions of these planes may vary with frequency and are dependent upon the particular matching structures used.

One pair of planes in arms (3) and (4), which are useful for purposes of calculation, may be defined in the following way. Suppose arms (1) and

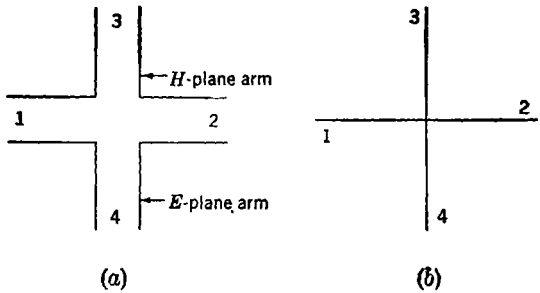

FIG. 6·7.—Symbols used to represent the magic T.

(2) are both short-circuited in planes equidistant from the plane of symmetry. If a wave is sent into either arm (3) or arm (4), the waves excited in arms (1) and (2) are reflected toward the junction from the short-circuiting planes with the same kind of symmetry as they had in traveling outward from the junction. A wave is therefore excited only in the input arm and the standing-wave ratio in the input arm is infinite. For this pair of planes in arms (1) and (2) a pair of planes, in arms (3) and (4), at which voltage maxima (zero admittance) occur may be specified. It now follows that, if arms (3) and (4) are short-circuited in these planes, an admittance of zero will be seen in the planes which were short-circuited in the previous experiment, looking into arms (1) and (2). An equivalent four-terminal-pair network describing the action of the magic T in terms of voltages and currents, can now be defined, where the terminal pairs are understood to be located in these four planes.

6·4. Description of the Magic T in Terms of Voltages and Currents.—The relationships between the voltages and currents in the terminal

pairs of any linear, passive four-terminal-pair network can be shown to be given by the four simultaneous linear equations

$$\left.\begin{aligned} i_1 &= y_{11}e_1 + y_{12}e_2 + y_{13}e_3 + y_{14}e_4 \\ i_2 &= y_{12}e_1 + y_{22}e_2 + y_{23}e_3 + y_{24}e_4 \\ i_3 &= y_{13}e_1 + y_{23}e_2 + y_{33}e_3 + y_{34}e_4 \\ i_4 &= y_{14}e_1 + y_{24}e_2 + y_{34}e_3 + y_{44}e_4 \end{aligned}\right\} \tag{1}$$

where the coefficients y_{nm} are constants depending on the properties of the particular network. For this particular circuit, the definition of the position of the planes of the terminal pairs and the fact that there is no direct coupling between opposite arms gives

$$y_{11} = y_{22} = y_{33} = y_{44} = y_{12} = y_{34} = 0.$$

Thus Eqs. (1) reduce to

$$\left.\begin{aligned} i_1 &= y_{13}e_3 + y_{14}e_4 \\ i_2 &= y_{23}e_3 + y_{24}e_4 \\ i_3 &= y_{13}e_1 + y_{23}e_2 \\ i_4 &= y_{14}e_1 + y_{24}e_2 \end{aligned}\right\} \tag{2}$$

It can further be shown that the coefficients y_{nm}, for a network containing no elements capable of dissipating power, are pure imaginary. If matched loads are connected to arms (1) and (2) and a current is induced in arm (3), the symmetry condition for the H-plane branch and the conservation of power allow the relation

$$i_3 = \pm jY_0 \frac{\sqrt{2}}{2}(e_1 + e_2)$$

to be written, where Y_0 is the characteristic admittance of the waveguide. Thus

$$y_{13} = y_{23} = \pm j\frac{\sqrt{2}}{2}Y_0.$$

The sign is determined by the choice of the plane of the terminals in arm (3), there being a plane, given by the definition above, every half wavelength from the first plane. Since the sign is reversed for consecutive planes, the definition of the terminal plane may be further restricted to correspond to the positive sign, and thus

$$y_{13} = y_{23} = j\frac{\sqrt{2}}{2}Y_0.$$

Similarly, a current induced in arm (4) with matched loads on arms (1) and (2) gives

$$i_4 = \pm j\frac{\sqrt{2}}{2}Y_0(e_1 - e_2).$$

Again, choosing the position of the terminal plane in arm (4) that corresponds to the positive sign, there results

$$y_{14} = j\frac{\sqrt{2}}{2}Y_0,$$

$$y_{24} = -j\frac{\sqrt{2}}{2}Y_0.$$

The set of transformation equations describing the magic T thus becomes

$$\left.\begin{aligned} i_1 &= jY_0\frac{\sqrt{2}}{2}(e_3 + e_4) \\ i_2 &= jY_0\frac{\sqrt{2}}{2}(e_3 - e_4) \\ i_3 &= jY_0\frac{\sqrt{2}}{2}(e_1 + e_2) \\ i_4 &= jY_0\frac{\sqrt{2}}{2}(e_1 - e_2) \end{aligned}\right\} \tag{3}$$

The transformation relations of Eq. (3) may be used, for example, to find the power delivered from a generator of known characteristic admittance on one arm to a load of known admittance on a second arm, if the admittances on the other two arms are also known. If a generator having an available power P_0 and an internal admittance Y_3 is connected to the terminal plane representing arm (3), the power delivered to a load of admittance Y_4 at the terminal plane representing arm (4) is found to be

$$P_4 = 4g_3g_4\left|\frac{(Y_1 - Y_2)}{(1 + Y_2Y_3)(1 + Y_1Y_4) + (1 + Y_1Y_3)(1 + Y_2Y_4)}\right|^2 P_0, \tag{4}$$

where g_3 and g_4 are the conductance parts of Y_3 and Y_4, respectively, Y_1 and Y_2 are the load admittances connected to the terminal planes representing arms (1) and (2), respectively, and all admittances are expressed in units of Y_0. This equation shows that the power transmitted to arm (4) is zero if Y_1 and Y_2 are equal. The magic T is therefore often regarded as a bridge. A similar relation showing the power delivered to the load on arm (1) is

$$P_1 = 8g_1g_3\left|\frac{(1 + Y_2Y_4)}{(1 + Y_2Y_3)(1 + Y_1Y_4) + (1 + Y_1Y_3)(1 + Y_2Y_4)}\right|^2 P_0. \tag{5}$$

From these expressions a similar equation for a load on any arm and a generator on any other arm may be written down simply by proper permutation of the subscripts. When the load and the generator are on

opposite arms the equation to be used is Eq. (4); when they are on adjacent arms, Eq. (5) is used.

There are many possible microwave circuits similar in behavior to the magic T just described. The conventional low-frequency "hybrid coil" circuit, used in wire telephony to isolate signals traveling in different directions on the same wires, behaves as a magic T if it is arranged to have the same characteristic admittance at all four terminal pairs. A microwave circuit that is coming into wide use as an equivalent to the magic T is shown in Fig. 6·8. This device may be made of waveguides, coaxial lines, or even open-wire transmission lines. The side arms may be connected either in series or in shunt at positions a quarter wavelength apart along the periphery of the circular $1\frac{1}{2}$-wavelength line. For the network to be matched, the circular line should have a line admittance

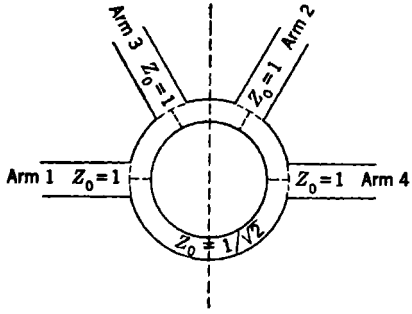

FIG. 6·8.—The ring circuit.

$\sqrt{2}$ times that of the branch lines, neglecting the effects of higher modes, if the side arms are connected in series, as shown. If the side arms are connected to the ring in parallel, the ring should have a characteristic admittance $\sqrt{2}/2$ times that of the side arms. In Fig. 6·9, a coaxial-line circuit of this type designed for 10 cm is shown. Since this device is used with small cable fittings and flexible cables it is difficult to make as precise measurements upon it as those on the waveguide magic T. The measurements that have been made show that the output power from one of the arms adjacent to the input arm is at least 20 db greater than the power from the opposite arm, for wavelengths between 8 and 11 cm. Since this small amount of coupling may be attributed to reflections in the cable connectors on the arms adjacent to the input arm, no attempts have been made to improve the balance. The standing-wave ratio in the input line is as small as would be expected with these connectors in the circuit; thus the higher-mode effects at the junctions are apparently negligible.

Another possible circuit that behaves as a magic T is shown in Fig. 6·10. This circuit is similar in principle to the waveguide version of the magic T, in that it consists of series and shunt connections, at a common

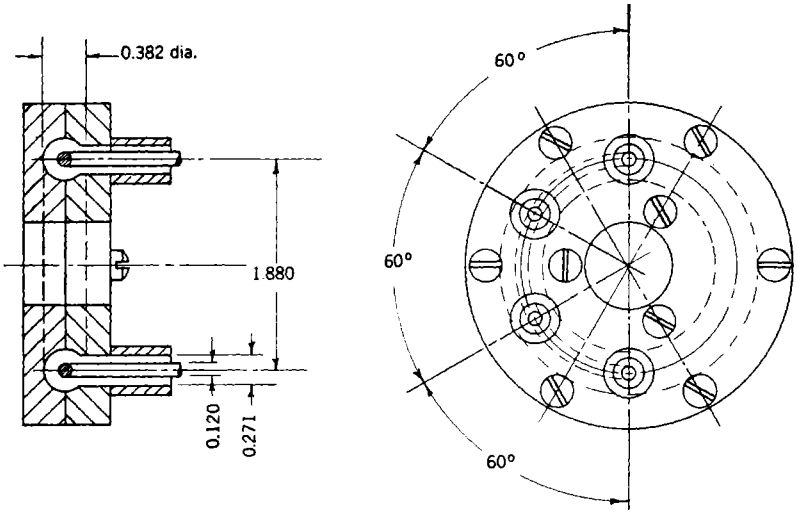

FIG. 6·9.—Magic T equivalent for 10-cm band.

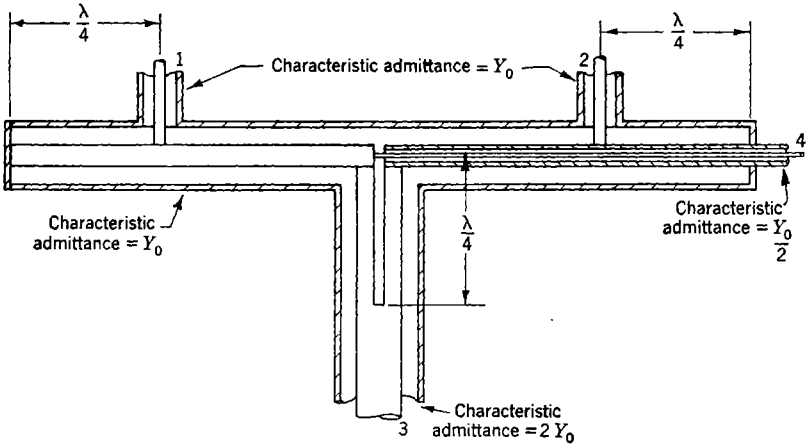

FIG. 6·10.—A magic T in coaxial line.

point, to a single line, the two ends of which form the other two pairs of terminals. This circuit has been considered for use in the longer-wavelength part of the microwave region, where the physical size of waveguides might be prohibitive, for applications in which a ring circuit

does not give sufficient bandwidth. Like the waveguide magic T, this circuit depends on the matching devices in the series and shunt-connected arms to obtain zero coupling between the other two arms. Like the magic T it derives the zero coupling between the series and shunt arms from its symmetry, and therefore this property is insensitive to frequency.

For any of the applications of the magic T, any of the equivalent forms just described can equally well be used. In the following discussions of balanced mixers the waveguide magic T will be used for all

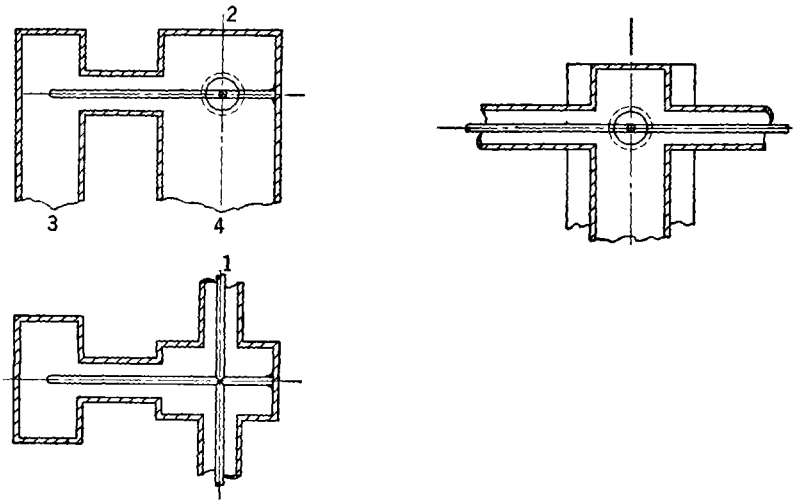

FIG. 6·11.—An equivalent to the magic-T circuit, made of coaxial line and waveguide in combination.

illustrative purposes because it has been used extensively in this application. The mixers can be constructed from waveguide or coaxial-line ring equivalents or from any of the other possible equivalent circuits if space or wavelength requirements make such forms preferable. One of the first balanced mixers to be designed using a magic-T circuit was made of a combination of coaxial lines and waveguide in the form shown in Fig. 6·11.

6·5. The Magic-T Balanced Mixer.—In order to construct a balanced mixer from a magic T, two opposite arms are terminated by crystals in standard waveguide mounts. The signal enters one of the remaining arms and the local oscillator power enters the other. Although it is not necessary to use this arrangement, the crystals are usually mounted on arms (1) and (2), in the terminology shown in Fig. 6·7. Thus the resulting balanced mixer appears, for the 3.3-cm band, as shown in Fig.

6·12. The role of the signal-input and local-oscillator-input arms can be interchanged, for in either case the relative phases between the incident signal wave and the incident local-oscillator wave are opposite at the two crystals. Since there is no direct coupling between the signal-input circuit and the LO-input circuit, no reactive decoupling in the local-oscillator circuit is required. Only enough local-oscillator power to drive the two crystals is needed. If more local-oscillator power is available, a matched dissipative attenuator can be used in the local-oscillator arm. The load admittance presented to the local-oscillator tube is thus well controlled, because the crystals themselves provide the local oscillator with a load that is approximately matched to the waveguide. The fact that the balanced mixer can be operated with a local oscillator having such a small output power, without the danger of loss of signal through

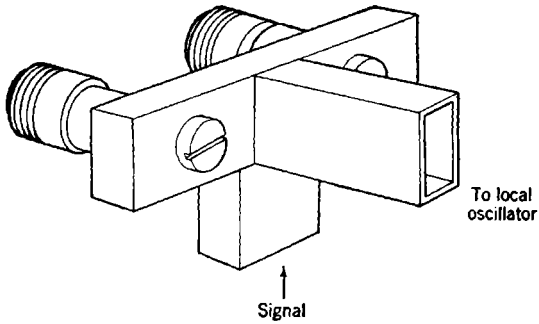

FIG. 6·12.—Magic-T balanced mixer for 3.3-cm band.

interaction of the signal and local-oscillator circuits is one of the many advantages of the magic-T balanced mixer.

The suppression of local-oscillator noise by the magic-T balanced mixer is not affected in the same way by the crystal admittance as it is in the simple balanced mixer earlier described. If one of the crystals reflects either the signal wave or the local-oscillator wave, the reflected power is sent only out the signal arm and the local-oscillator arm, because the opposite arms of the magic T do not couple directly. If there is no reflection of waves traveling outward in these arms, there is no way in which the signal power or the local-oscillator power delivered to the second crystal can be influenced by the mismatch of the first. If there is sufficient available local-oscillator power to allow some matched dissipative attenuation between the magic T and the local oscillator, the nonreflecting condition for the local-oscillator arm is approximated. If there is a bandpass TR cavity, or no resonant circuit at all, in the signal arm, a wave traveling outward in that arm is radiated by the antenna without reflection. If a resonant TR cavity must be used, that part of

the local-oscillator wave which, having been reflected by the crystal, travels out the signal arm, is reflected by the TR cavity and interferes with the direct local-oscillator wave coupled to the two crystals. The result is that the division of local-oscillator power between the two crystals becomes similar to the division in the simpler shunt mixer. The power reflected from one crystal is reduced to one-half of its value by two transits through the magic T before it arrives at the other crystal. However, as application of Eq. (5) will show, the form of the dependence of the delivered local-oscillator power on the admittances of the crystals is the same in the magic-T circuit if the signal arm is open-circuited as in the balanced mixer with shunted crystals. A two-to-one ratio of conductances causes a two-to-one split of power. The remaining power, originally delivered to the mixer, is reflected into the local-oscillator attenuator. This unbalance in local-oscillator power delivered to the two crystals does not seriously affect the suppression of local-oscillator noise because the crystal conversion loss is not strongly dependent on the amount of local-oscillator drive, provided that the amount is sufficient to produce a few tenths of a milliampere of rectified crystal current.

The splitting of the signal power between the two crystals is not influenced greatly by the presence of a TR cavity because a reflected wave, at the signal frequency, coming from the mixer would not be strongly reflected by the TR cavity, which is tuned to pass this frequency. Thus the magic-T balanced mixer does not require nearly so great a similarity between the two crystals used as does the simple balanced mixer. If both the signal line and the local-oscillator line are non-reflecting to waves traveling outward from the mixer, the only effect of reflection by the crystals is an increase in their conversion loss by the same amount as would be found if they were operated individually from matched generators. With the same tuning of the crystal mounts as in the conversion-loss test set, and at the same frequency, the total conversion loss for each crystal in the balanced mixer, including r-f reflection loss, would be the same as would be measured for that crystal in the test set. Under these conditions it is unlikely that more than 3 db of unbalance in conversion loss would be found, if the crystals had a small specification value of maximum conversion loss and normal i-f admittances.

It is desirable to employ an i-f coupling circuit, such as that shown in Fig. 6·13, the performance of which is not affected by a lack of balance in the i-f admittances of the two crystals. The transformer shown in the figure resonates with the mixer and tube capacitances and has the bandwidth and the impedance stepup from the crystals to the grid required to achieve a good noise figure. To reduce capacitive coupling between the coils, adjacent ends are made to operate at ground

potential, and to achieve this the secondary is made of two sections wound in opposite directions. Ordinarily the inner ends of the two primary coils would be grounded through the current-filter capacitances, but in this circuit the impedances Z are connected between the i-f ground and the coils. The bypass condenser between the inner ends of the two coils ensures that they are at the same potential. Thus, between the common ends of the primary coils and ground there appears an impedance equal to $Z/2$. The impedance Z is chosen in such a way that $Z/2$ is the complex conjugate of the impedance that would be measured between the junction of the two primary coils and ground if each crystal had the i-f output impedance of an average crystal.

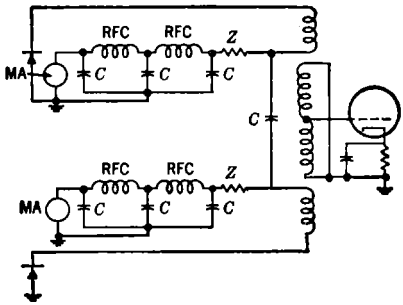

FIG. 6·13.—Special i-f input circuit for balanced mixer. C = i-f bypass, RFC = i-f choke, Z = see text, MA = crystal-current meter.

The addition of this impedance to the push-pull input circuit makes the behavior of this circuit similar to that of a magic T. If a voltage were impressed from grid to ground on the secondary of the transformer, equal voltages in opposite phases would be produced across crystals having equal impedances. No voltage would result across the impedances Z. A voltage across the dummy-load impedance $Z/2$, on the other hand, would produce equal voltages in like phases across crystals having equal impedances, with no voltage produced at the grid. Thus the terminals of the dummy-load impedance $Z/2$ correspond to the terminals of arm (3) of a magic T, and the grid-to-ground terminals correspond to those of arm (4). The choice of a dummy-load impedance in the manner described corresponds to the use of a matching structure and a matched load in arm (3) of a magic T. If the grid admittance of the tube were the complex conjugate of the admittance of the secondary terminals of the transformer, the equivalence to a magic T would be complete. For best i-f amplifier noise figure, however, some mismatch exists at these terminals. The advantage of a circuit that is like a magic T is that a voltage impressed across one crystal does not develop a voltage across the other, as seen from the argument that was used to show the absence of direct coupling between the collinear arms of the magic T. Thus the coupling of a signal from one crystal to the amplifier tube would be independent of the i-f impedance of the other crystal. Since the grid is not matched to the transformer, however, the independence is not complete so far as signal transmission is concerned.

Suppose that two crystals do not have the same i-f impedances, but that they do develop identical output voltages when loaded with an impedance that matches the i-f output impedance of an average crystal. If these crystals were used in a balanced mixer connected to the present input circuit, the suppression of local-oscillator noise would be perfect because the equal voltages excited by the crystals would develop a voltage only in the dummy load $Z/2$, corresponding to arm (3) of the magic T. Because of the choice of this impedance, each crystal is loaded with an impedance that matches the i-f output impedance of an average crystal and, therefore, the equality of the developed i-f voltages is maintained. Because the test apparatus used to measure the conversion loss of crystals actually measures the voltage developed across a load impedance of this kind, crystals having identical conversion loss in the crystal test set should give perfect suppression of local-oscillator noise. With the magic-T-equivalent input circuit and the magic-T mixer circuit this suppression is assured, independently of the actual i-f impedance and r-f impedance of the crystals. Because of the magic T, an inequality in r-f impedance contributes little to the unbalance of the mixer and similarly, because of the i-f input circuit, which is equivalent to a magic T, an inequality in i-f output impedance causes little loss in noise suppression.

If these two circuits are used, there is some significance to a calculation of the noise suppression realized for a given inequality in crystal conversion loss, as measured by a test set. The amount of LO-noise suppression may be defined as the ratio of the effective conversion loss for the signal to that for the local-oscillator noise, the conversion losses being measured from the corresponding r-f input terminals to the i-f-amplifier grid. If L_1 and L_2 are, respectively, the conversion losses of the two crystals as measured in a standard test set, the square of the i-f signal voltage at the i-f amplifier, per unit r-f signal power available at the mixer, is proportional to $(\sqrt{L_1} + \sqrt{L_2})^2$. The square of the i-f noise voltage developed at the i-f amplifier input terminals, per unit of LO noise power available in the mixer, is proportional, with the same proportionality constant, to $(\sqrt{L_1} - \sqrt{L_2})^2$. The suppression of local-oscillator noise is

$$S = \left[\frac{\left(\frac{L_1}{L_2}\right)^{1/2} + 1}{\left(\frac{L_1}{L_2}\right)^{1/2} - 1}\right]^2. \tag{6}$$

In Fig. 6·14 a curve of S, in decibels, as a function of the difference, in decibels, in the conversion losses of the two crystals is shown. Since more than 15 db of noise suppression is obtained if the difference between the losses of the two crystals is less than 3 db, it is reasonable to assume that no selection of crystals would be required under ordinary circumstances.

A magic-T balanced mixer for 1.25 cm, with an i-f amplifier equipped with an input circuit such as that of Fig. 6·13, was tested in the following way. A group of 30 randomly selected 1N26 crystals were measured for r-f impedance, conversion loss, and noise temperature. The r-f impedances scattered in a random fashion, within the impedance circle corresponding to a voltage standing-wave ratio of 3. The conversion losses ranged from 6 to 8.5 db and the noise temperature from 1 to 2.

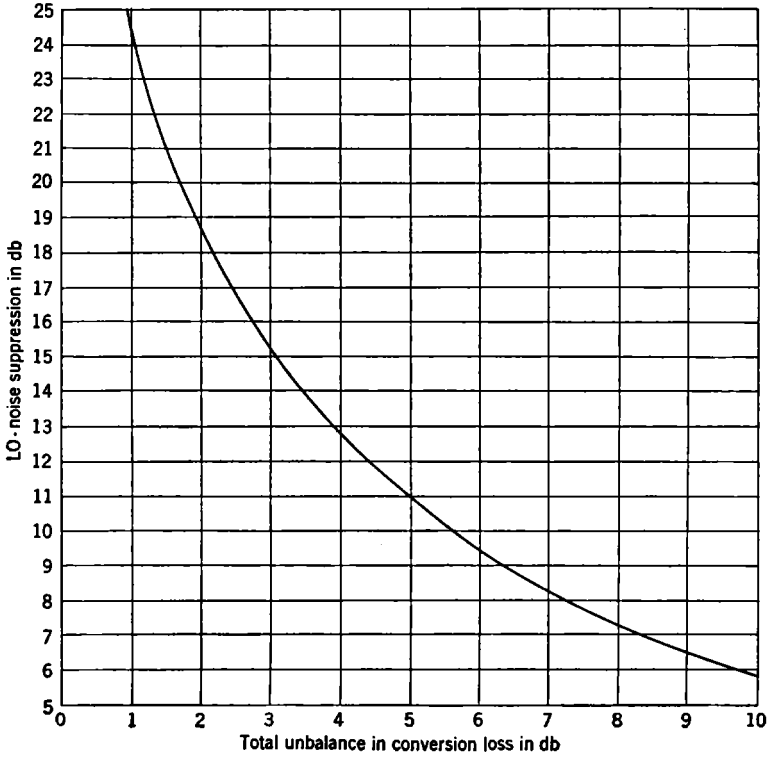

FIG. 6·14.—Local-oscillator-noise suppression as a function of unbalance in conversion loss.

Pairs of crystals having almost identical r-f impedances and losses were used and the effective over-all noise figure of the mixer and i-f amplifier was measured. With pairs of crystals matched in this way, the result corresponded, within the probable error of measurement, to the calculated value, if local-oscillator noise was neglected and if the effective crystal noise temperature was assumed to be equal to the arithmetic mean of the values for the two crystals. Other pairs were formed, representing the diametrical extremes in r-f impedance and the smallest and largest

conversion loss. For these pairs the measured effective over-all noise figure agreed closely with the calculated value assuming a conversion loss midway, in decibels, between the two and, again, the arithmetic mean of the noise temperatures. Thus the measurements showed that the suppression of local-oscillator noise was sufficient to reduce to a negligible amount the contribution, from that source, to the over-all noise figure.

An independent measurement, for the various crystal pairs, of the actual LO-noise suppression was made in the following way. A test signal was added to the local-oscillator signal, and the output voltage from the receiver was measured. The result of this measurement was compared with the output voltage from the receiver when the same test signal was sent into the signal arm of the magic T of the mixer. The noise suppression was found to vary from about 13 db to over 30 db depending on the pair of crystals used. The results correlated reasonably well with what would be expected on the basis of the data on the individual crystals. There is, however, an additional factor depending on how well the input transformer is balanced; consequently, the crystal pair appearing to be the most nearly balanced with respect to conversion loss did not give the greatest noise suppression.

6·6 Additional Features of the Magic-T Balanced Mixer.—The magic-T balanced mixer has been found to furnish a very satisfactory solution to the problem of local-oscillator noise. It has, moreover, certain features that make it useful even in the absence of such noise.

One of these features is the small LO power requirement, which makes possible the use of a well-matched attenuating pad between the local oscillator and the mixer, as already discussed. This attenuation becomes very important in the 3- and 1-cm bands if a mixer must be operated without the assistance of a resonant TR cavity. The power available from most small local-oscillator tubes is insufficient in these bands to allow the reactive coupling circuits to be used without involving a significant interaction of the local-oscillator circuit on the signal circuit, with an accompanying deterioration in noise figure. With the introduction of the wide-band fixed-tuned TR switch in the 3.3-cm band, the balanced mixer became the only available mixer satisfactory from this viewpoint. Because the effect of local-oscillator noise on the over-all receiver noise figure is increased if no resonant filter is used in the signal line of a simple mixer, the balanced mixer has an additional advantage.

Another feature of the magic-T balanced mixer is that radiation of the local-oscillator wave by the antenna of the receiver is reduced. This is because the only power coupled into the antenna circuit from the local-oscillator circuit is a part of the power reflected by the crystals. In an ordinary single-crystal mixer, with nondirectional local-oscillator

coupling, as much local-oscillator power is sent to the antenna as to the mixer crystal unless there is a resonant filter in the signal line. With the balanced mixer, a resonant filter still attenuates the local-oscillator power that is coupled into the signal arm of the magic T. If the radiation of local-oscillator power must be minimized for any reason, the use of a balanced mixer, with one of the crystal mounts made tunable, would be worth while. Since the scatter of crystal impedances is so large, it could hardly be expected that the local-oscillator power sent to the antenna, in the absence of a resonant filter, would always be more than 10 db below the input level to the mixer, unless the crystal impedances were equalized by tuning. If one crystal were matched to the waveguide, for instance, and the other had a voltage standing-wave ratio of 2, the power sent to the antenna would be $\frac{1}{36}$ of that sent into the mixer by the local oscillator. If each of the crystals had a voltage standing-wave ratio of 2, but with reflection coefficients having opposite phases, $\frac{1}{9}$ of the power sent into the mixer by the local oscillator would be radiated by the antenna. With a tuning adjustment on one crystal such that the reflection coefficients could be equalized, the radiation by the antenna could be kept at least 40 db below the input level of the mixer, at the frequency for which the tuning was made.

The balanced mixer discriminates against i-f signals arising from beats between two frequencies present in the signal channel, for the same reasons that it suppresses local-oscillator noise. This discrimination is of value because it reduces the susceptibility of the receiver to interference from signals that are not at the signal- or image-frequency sidebands of the local oscillator. Interference can be produced, in a receiver having an ordinary mixer and no resonant preselecting filters, by beats between any two signals that differ in frequency by the intermediate frequency and that can propagate down the transmission line of the receiver. The discrimination against interference of this kind is about the same as the discrimination against local-oscillator noise and may, unless selected crystals are used, be as small as 13 db. If such discrimination is deemed important in view of the application of the receiver, provision may be made to achieve an exact balance in the mixer circuit by addition of a small adjustable r-f attenuator, for example, between one crystal and the junction. The crystal having the smaller conversion loss should be used on the side that has the attenuator, and the adjustment would have to be made on an actual set of interfering signals. Whether the balance would be sufficiently good over the whole band in which interfering signals can occur, however, is questionable.

If a resonant TR cavity is used in the signal line of a balanced magic-T mixer, the i-f admittance of the crystals is influenced, as in the single mixer, by reflection of the image frequency by the TR cavity. It is

difficult to make the line length between the cavity and the crystals so short that the phases of the reflected image-frequency waves arriving at the mixer crystals do not change very much over a wide frequency band. A considerable variation in i-f admittance and some variation in conversion loss over a wide band might therefore be expected. With the input circuit that is equivalent to a magic T, the variation of i-f admittance does not seriously affect the balance of the mixer but it does affect the pass band of the input circuit and the i-f-amplifier noise figure. For a single-frequency receiver, as with the single mixers, the length of line between the cavity and the crystal can be chosen to give the best noise figure. For most purposes, however, this has not been considered worth while and instead, consideration has been given to a special change in the balanced mixer to allow the effect of the image-frequency wave to be eliminated at all frequencies.

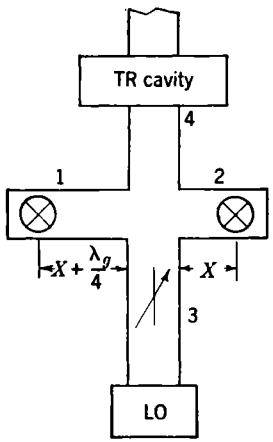

FIG. 6·15.—Balanced mixer so arranged that the image-frequency wave is transmitted into the local-oscillator attenuator.

Since the phase relation between the signal and the local-oscillator waves results from the symmetry of the magic T, the line lengths from the T-junction to the crystals may be made unequal. A change in the line length, very small compared with a wavelength at the intermediate frequency, makes a very small change in the phase of the i-f voltage produced by the crystal, because both the local-oscillator wave and the signal wave are delayed by almost the same phase angle. It is therefore possible to make the distance from the junction of the magic T to one crystal a quarter of an r-f wavelength different from the distance from the junction to the other crystal, as shown in Fig. 6·15. The result of adding a quarter wavelength to one side of the magic T is that, if image-frequency waves of equal amplitude are developed by the crystals, their phase relation, as they converge on the junction, is such that they are transmitted entirely into the local-oscillator arm of the magic T. The way in which this comes about is illustrated graphically in Fig. 6·16. The vectors of Fig. 6·16*a* represent the waves that are excited in the crystal arms of the magic T by the local oscillator and the signal generator. The phase of the local oscillator is taken as a standard of reference and the vector representing it therefore remains fixed. The relative phases between the signal wave and the local-oscillator wave, in each arm, are determined by the angle between the local-oscillator vector and the small vector representing the signal. Since the frequency of the

signal differs from that of the local oscillator by an amount equal to the intermediate frequency, the small vectors rotate at the intermediate frequency, in the direction indicated by the curved arrows. Because the local oscillator is connected to arm (3) of the magic T, the vectors representing the local-oscillator phases at points equidistant from the junction in the two crystal arms point in the same direction. The vectors representing the signal are oppositely directed, since the signal enters the mixer from arm (4).

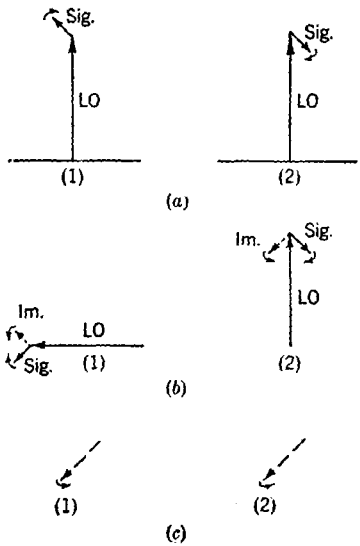

FIG. 6·16.—Graphical illustration of relative phases of waves at the LO signal, and image frequencies, when the crystal arms differ in length by one quarter wavelength. (*a*) Vectors showing the relative phases of the incident signal and local-oscillator waves in arms (1) and (2) at planes equidistant from the junction. (*b*) Vectors representing the relative phases between signal, local-oscillator, and image waves at the two crystals. (*c*) Vectors showing relative phases of the two image-frequency waves as they converge on the junction of the magic T from the two crystals.

At the two crystals, the relative phases are changed because one line is longer, by a quarter wavelength, than the other. If the vector representing the phase of the local-oscillator wave at crystal (2) is directed upward, that at crystal (1) is directed toward the left because it is retarded by 90°. A like change in the relative phases between the two signal vectors occurs, and the situation is therefore like that represented in Fig. 6·16*b*. In this diagram the phases of the two image-frequency waves generated by the action of the crystals are indicated by the dashed-line vectors. Because the image frequency differs from the local-oscillator frequency by the same amount as does the signal frequency but in the opposite sense, these vectors rotate at the intermediate frequency in the direction opposite to that of the rotation of the signal vectors. The relative phase between the image and signal waves is not uniquely determined at the planes of the crystals, since the effective line lengths within the crystals may not be negligible. However, the relative phases between the two image vectors must be as shown, if the crystals are identical, because the phase of each is determined by the relative phases of the signal and local-oscillator voltages. A reversal of the phase of the signal wave relative to that of the local-oscillator wave must reverse the phase of the image. The relative phases have been drawn on the basis of two assumptions. It is assumed first that the

image-frequency wave is produced entirely by modulation from the i-f voltage, and second, that the signal voltage arising from the i-f voltage is such that the admittance of the crystal to the signal wave is reduced by the presence of the i-f voltage.

The image-frequency waves travel from the crystals back toward the junction of the magic T. Because the line on the left side is a quarter wavelength longer than that on the right, the relative phases of the two image-frequency waves are changed by a 90° retardation of the vector representing the image wave on the left. These waves therefore have like phases, as shown in Fig. 6·16*c*, as they converge on the junction, and if they have the same amplitudes, all of the image-frequency power is transmitted into the local-oscillator arm of the mixer. A matched attenuator pad in this arm allows the image-frequency power to be absorbed without reflection, and both crystals behave as they would in a mixer without a resonant signal circuit. The i-f admittance and the conversion loss of each crystal are not strongly dependent on the operating frequency. A large percentage change in frequency can be made before the difference in length of the two crystal arms becomes so different from a quarter of a wavelength that most of the image-frequency power is not sent into the local-oscillator arm.

It is not known how well this treatment of the image-frequency wave can be achieved in practice. Its success depends on the equality of the amplitudes of the two image-frequency waves generated, and on the validity of the assumption that the effective line lengths contained within the crystals are identical. Since the production of the image-frequency wave by the crystal is a second-order effect, a greater inequality would be expected in the production of image power by various crystals than in their conversion efficiency. It is also possible that the effective line length contained within the crystals, especially at 1 cm, would vary too much, from one crystal to another, to allow the assumption about the relative phases of the two image-frequency waves to hold. Again, it would be possible to add a tuning adjustment, in the form of a line of variable length on one side of the magic T, so that the correct relative phases of the image frequencies could be obtained. Measurement of the output admittance of the i-f coupling circuit as a function of the line length between the TR cavity and the magic T shows how well the image-frequency wave is being disposed of. If all the image-frequency power is being transmitted to the local-oscillator attenuator, the i-f admittance should be independent of the distance between the cavity and the magic T, unless harmonic frequencies have an effect.

6·7. Special Crystal Mounts for the Balanced Mixer.—For some receivers, the push-pull transformer of Fig. 6·13 is not suitable. For example, because mutual inductance is used and because it is not easy to

obtain large coupling coefficients in transformers for high frequencies, some difficulty is encountered in making such a circuit with a very wide pass band. It would be much simpler if the two i-f voltages could be made to have like phases so that the output voltages of the two crystals could be added in parallel.

If the pin end of one crystal and the base end of the other are grounded, the crystals can be made to produce i-f voltages in like phases from the input signal and voltages in opposite phases from local-oscillator noise. For the ceramic cartridge crystals used in the 3-cm band, an inverted crystal mount has been designed which allows the i-f voltage to be taken from the large end of the cartridge, with the pin end connected directly to the waveguide. This mount is similar to the 10-cm coaxial-line mount, in that it has a polystyrene-supported choke on the large end of the crystal. To obtain flexible fingers for making contact with the pin end of the crystal, a half-wavelength coaxial line is used. The position of the crystal in the waveguide, and its r-f admittance, are identical with those in the ordinary 3.3-cm crystal mount.

The disadvantage of using crystal mounts of opposite polarities in a balanced mixer is that an i-f input circuit equivalent to a magic T is difficult to achieve. Direct connection of the output terminals of the two crystals in parallel does not secure the independence of noise suppression from the i-f admittance that is achieved with the push-pull circuit. It is possible to devise a shunt circuit that contains a dummy load for the unbalance signal but such a circuit has not been tried. With a non-resonant signal circuit connected to the mixer, however, there is not a great variation in i-f admittance from crystal to crystal, and the unbalance caused by inequality of the i-f admittances may not be serious.

It is impossible to achieve TR-aided tuning of the crystal mounts over a wide band of frequencies because the distance between the crystals and the TR switch is too great. Because of this fact, and because the balanced mixer is peculiarly suitable for use in systems that have no resonant TR switch or preselecting cavity between the antenna and the mixer, a crystal mount that has an r-f admittance characteristic less frequency-sensitive than that used in the simple mixers is desirable.

For the band from 3.13 to 3.53 cm, an improved crystal mount has been designed. It was first attempted to increase the bandwidth of the simple crystal mount by adding a resonant iris across the waveguide, a quarter wavelength ahead of the crystal. Since the susceptance of a crystal in the simple mount increases with frequency, whereas the conductance remains approximately constant, the crystal in its mount is approximately equivalent to a shunt-tuned resonant circuit, as discussed in Chap. 3. If a resonant shunt-tuned iris is placed a quarter wavelength from the center line of the crystal, toward the generator, the combination

behaves as a double-tuned coupled circuit. The response may be double-peaked or single-peaked, depending on the Q of the resonant iris. The resonant iris may be made up of a symmetric inductive iris and a capacitive post in the plane of the iris, and the Q of such a structure is pro-

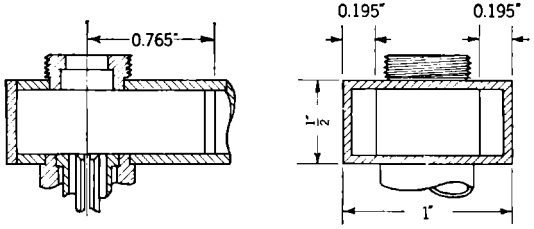

FIG. 6·17.—Crystal mount with iris for broad pass band.

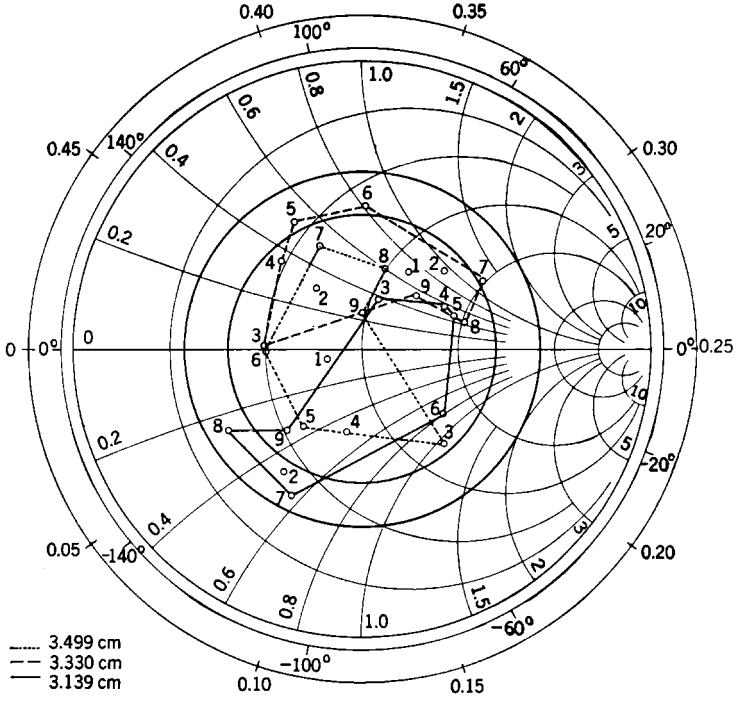

FIG. 6·18.—Admittances of representative crystals in broadband mount.

portional to the susceptance of the inductive iris at resonance. Such a structure can be made to give, for a given crystal, less than about 0.5-db reflection loss in the 12 per cent band, but this structure does not represent a significant improvement in the bandwidth of the crystal mount for many crystals. The tuning and the effective coupling are

changed if the admittance of a crystal does not match the waveguide admittance at the center frequency, and the compensation of the iris for the frequency sensitivity of the crystal is not so good as for a crystal that is matched at the center frequency. It has been found that there is no iris Q that gives significantly improved results with crystals representing all r-f admittances to be encountered.

A more satisfactory means of improving the bandpass characteristic of the simple crystal mount was found in the form of a simple inductive iris. The final design of this crystal mount is shown in Fig. 6·17. An

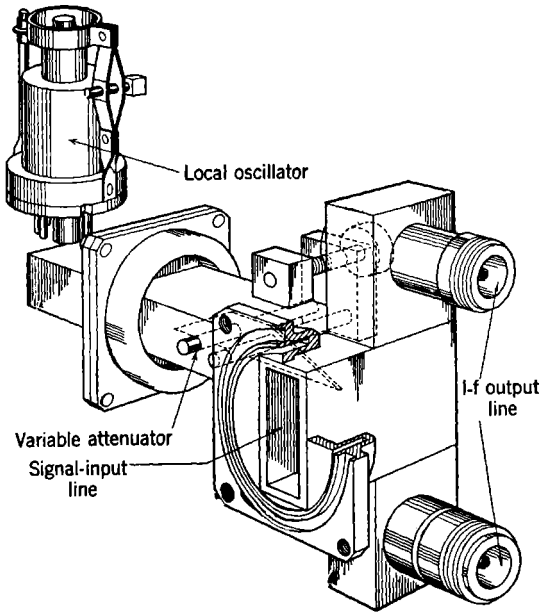

FIG. 6·19.—Perspective view of 3.3-cm magic-T balanced mixer using one inverted crystal mount.

average crystal in the mount shown in detail in Fig. 3.6 has, at the center of the frequency band, a conductance slightly above the line admittance. The susceptance of the inductive iris, and its position, are such that the area covered by the admittance plot for representative crystals is centered at the characteristic admittance of the line at the midband frequency. The combination of the frequency sensitivities of the line length from crystal to iris, of the iris susceptance, and of the crystal admittance is such that the total spread of admittance is reduced from that for a simple mount. Curves showing the admittances measured at 3.14 cm, 3.33 cm, and 3.50 cm are given in Fig. 6·18. Almost all of the representative crystals fall within the circle of voltage standing-wave ratio equal to 2.65

and, therefore, the reflection loss for almost all crystals is less than 1 db at any wavelength in this band.

Figure 6·19 is a perspective view of a magic-T balanced mixer designed for the 12 per cent band centered at 3.33 cm. Included in the figure are crystal mounts in opposite polarities, the band-broadening irises, the matching structures for the magic T, and a variable matched attenuator for the LO coupling adjustment.

6·8. A Double Balanced Mixer for Separate-channel AFC.—Because the local-oscillator circuit for a magic-T balanced mixer is simple, the addition of a second mixer for separate-channel AFC is straightforward. A simple single-crystal mixer could be coupled to the local-oscillator

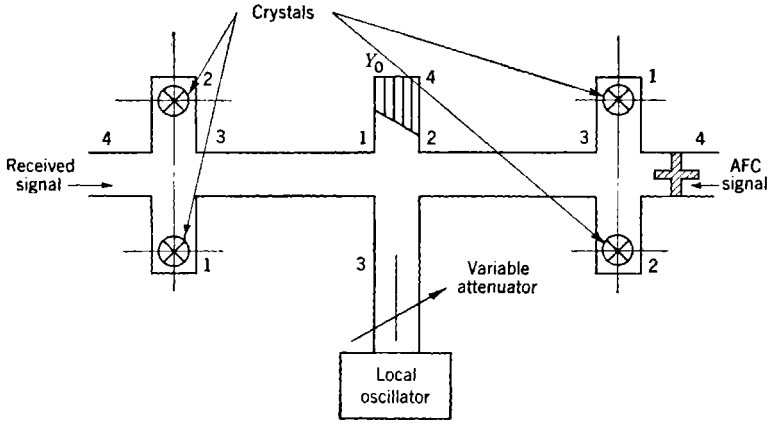

FIG. 6·20.—Two-channel broadband mixer.

waveguide, on the high-power side of the local-oscillator attenuator, with any of the circuits described in Chap. 3. The two-channel balanced mixers have been made with a balanced mixer for each channel, however, rather than with a simple mixer for the AFC channel. Although the suppression of local-oscillator noise is not significant in the application of the balanced mixer as an AFC mixer, some of the other features are desirable.

A two-channel balanced mixer is constructed from three magic T's. One T is used for each mixer and the other to split the local-oscillator power between the two balanced mixers, in the manner indicated symbolically in Fig. 6·20. Although the fourth arm of the center magic T, containing only a dummy matched load, is not essential, it does serve a useful purpose. If the attenuator in the local-oscillator arm is reflectionless, no local-oscillator power reflected from one mixer is coupled into the other. For this reason all four crystals receive power depending upon their admittances in the same way as if each were connected to a matched

waveguide generator independently. It is therefore possible to use a single adjustment of the local-oscillator power for all four crystals, since their reflection losses will not be large.

Another advantage of the center magic T over a simple T-structure for splitting the local-oscillator power is that an increase in the cross attenuation between the two mixers is obtained through its use. If power that leaks past the TR cavity enters the signal-input arm of the left-hand mixer, none of this power is sent into the local-oscillator arm of this mixer, provided the two crystals have identical r-f admittances at this power level. Under ordinary circumstances the two crystals are sufficiently alike to allow not more than 10 per cent of such power, sent into the mixer, to be coupled out the local-oscillator arm. To travel into the AFC mixer this power must be coupled from arm (1) to arm (2) of the center magic T. If the reflection coefficients for waves traveling outward in arms (3) and (4) are both zero, the coupling between arms (1) and (2) is zero and, therefore, the cross attenuation is infinite. In practice the dummy load in arm (4) can be made to have a very small reflection coefficient, but the reflection coefficient in arm (3) is determined by the amount of attenuation used. Even in the worst case, when the local-oscillator tube delivers only sufficient power to drive the crystals with no attenuation and completely reflects the signal frequency, 6 db of cross attenuation is gained through the use of the center magic T.

The balanced AFC mixer provides additional effective cross attenuation. The signal arriving from the receiving mixer by way of the local-oscillator circuit, because it arrives with the local-oscillator signal, is discriminated against by the combination of mixer and i-f input circuit in just the same way as is local-oscillator noise. Even if the conversion losses of the crystals differ by as much as 3 db, the equivalent of 15 db of cross attenuation is obtained. Thus a total of at least 31 db of cross attenuation can be obtained with this double mixer, even with a local oscillator having just sufficient available power to drive the four crystals. With more local-oscillator power and well-balanced crystals, the cross attenuation would be very high and an ordinary leakage signal from the TR switch would certainly not interfere with the functioning of the AFC circuit.

The balanced AFC mixer serves also to reduce the effect, on the AFC circuit, of the video pulse produced at the output terminals of a crystal, when the AFC signal is too large. Such video pulses may contain frequency components in the intermediate-frequency region and these are sometimes large enough, relative to the beat-frequency signal, to cause some interference with the AFC action. With the balanced mixer, if the rectification efficiencies of the two crystals are equal, the video pulses produced by the two crystals will also be equal. With an i-f

input circuit arranged to transmit the beat-frequency signal, the i-f components of the video pulses cancel. Video components due to stray signals or to harmonics of the transmitter signal are similarly canceled.

One difficulty often encountered with an AFC circuit is that the circuit locks when a harmonic of the beat frequency passes through the i-f amplifier. With an intermediate frequency of 30 Mc/sec, for instance, the AFC circuit might lock with the local-oscillator frequency only 15 Mc/sec away from that of the transmitter. To prevent this, the harmonics of the beat frequency must be kept below the threshold level of the AFC circuit. The balanced mixer assists in this because even-order harmonics, arising from beats between an even-order harmonic of the local oscillator and a harmonic of the signal of the same order, are balanced out. This may be shown to occur because a reversal in phase of a fundamental frequency does not alter the phase of an even-order harmonic generated from it. The cancellation of such even-order harmonic voltages is probably not very complete, because the efficiency of generation of harmonics by different crystals probably varies considerably.

A further attractive feature of the balanced mixer for the AFC channel is that the signal-input arm can be provided with a matched dissipative attenuator without affecting the coupling of the local oscillator. If such an attenuator is used, the crystals receive signal power from a matched generator, which is not true if a cutoff attenuator, or small hole, alone is employed. From a matched generator, the power delivered to the crystals is not strongly dependent on their admittances and, therefore, the range of input power for which the circuit must be made to operate is considerably reduced. A dissipative attenuator made of polyiron, cut with matching transformers at both ends and having 20 or 30 db of attenuation, has been used in the signal-input arm of the magic T that forms the AFC mixer. This attenuator also reduces the danger that stray leakage signals may get into the signal circuit at a connector on the signal-arm waveguide. Interference with the operation of the AFC circuit from this source is therefore reduced. Harmonics of the AFC signal coming from the transmitter tube are also effectively attenuated and should therefore cause no trouble. Thus it is apparent that the balanced AFC mixer solves practically all of the problems encountered in the two-channel mixer, and the improved performance is well worth the added complexity of one extra crystal.

A perspective view of a double balanced mixer used in the 12 per cent band centered at 3.33 cm is shown in Fig. 6·21. This mixer represents only one of many possible arrangements of the magic T's and was chosen only because it gave the most convenient physical arrangement for the application.

A double balanced mixer for the 1.25-cm band is made from a die-cast block containing all of the waveguides and matching irises. Once the dies have been made, this part of the mixer can be inexpensively reproduced with very high precision and in large quantities. The remaining parts, associated with the crystal mounts, the i-f attenuator, and the waveguide choke joints, may be added later or machined into the die-cast block. For the block to be die-cast, it has to be made in two halves and

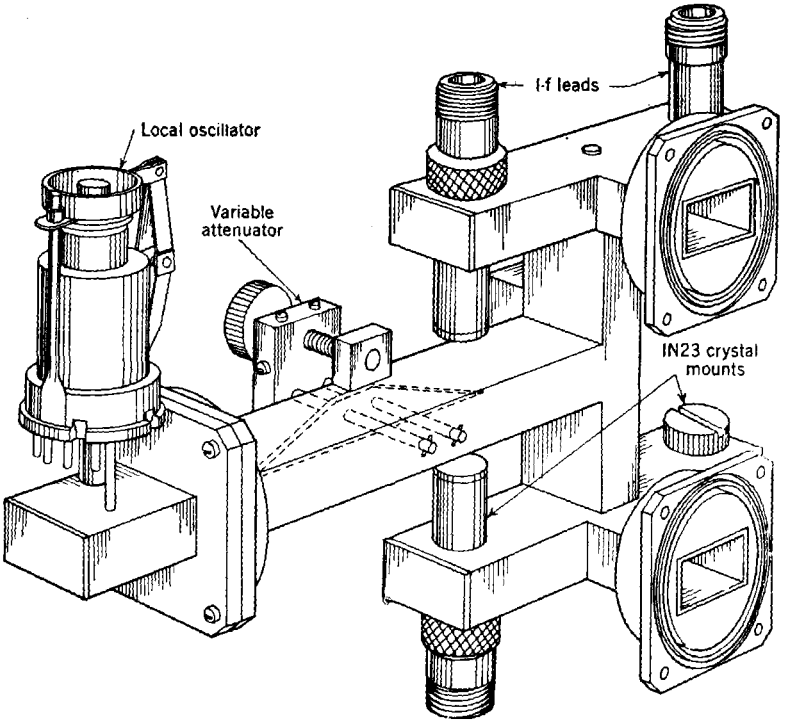

FIG. 6·21.—A double balanced mixer for 3-cm band.

there has to be a small taper in the waveguide heights to allow the pieces to be pulled off the dies. The mixer is split in a plane through the center of the broad wall of most of the waveguides so that no current lines are cut by the split, except in the regions of the junctions of the magic T's. No difficulties are caused by leakage or poor contacts in this split. The additional precaution has been taken, however, to have the adjacent faces of the two halves honed flat. The tapers in the waveguides cause their heights to change from 0.171 in. at the center, in the plane of the

split, to 0.169 in. at the side walls. There is no detectable effect on the standing-wave ratios in the mixer from this small taper. A perspective view of the double balanced mixer, with the two halves separated to show the internal structure, is shown in Fig. 6·22.

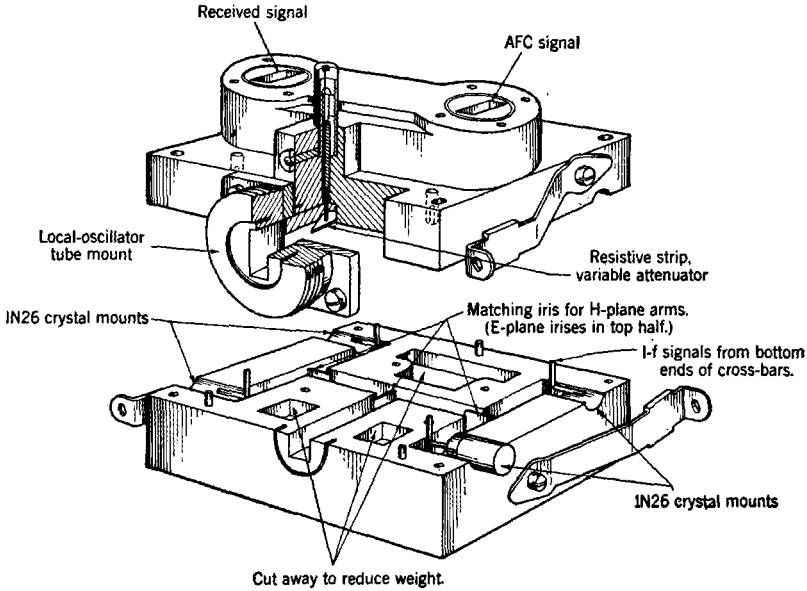

FIG. 6·22.—A die-cast double balanced mixer for 1.25-cm band.

6·9. Other Special Circuits.—It is very simple to adapt the double balanced mixer to satisfy other, special, circuit requirements. If, for instance, a separate local oscillator for beacon reception is desired, such an oscillator may be connected to the dummy arm of the center magic T. The dummy load may be replaced with a variable attenuator and this arm becomes equivalent to the input arm of the first local oscillator. Either of the oscillators may be used, with a switch provided to select the desired one. For beacon reception, the AFC mixer is not used, but no harm comes of supplying local-oscillator power to it.

If beacon AFC is desired, a reference cavity and detector crystal may be added to the LO-tube mount in place of the short circuit normally used behind the tube antenna. The same requirements must be met by the circuit, to avoid frequency discontinuities, as by the circuit described in Sec. 4·13.

If a resonant TR cavity is used with a mixer for a radar system, it may be desirable to use a beacon-tuning device. This device can be placed, just as in the single mixers, in the signal input arm a half-wave-

length behind the TR cavity. Shutters for protection of the crystals during shutdown and turnon periods can also be added to the signal input arm.

Because the magic-T balanced mixer is especially suited for use with a broadband nonresonant TR cavity, the 3-cm-band versions have usually been used in combination with a TR system of that type. As a consequence beacon tuners have not been required. In conjunction with systems using the bandpass TR cavity, in the desire to eliminate as many of the manual tuning controls as possible, the electronically controlled

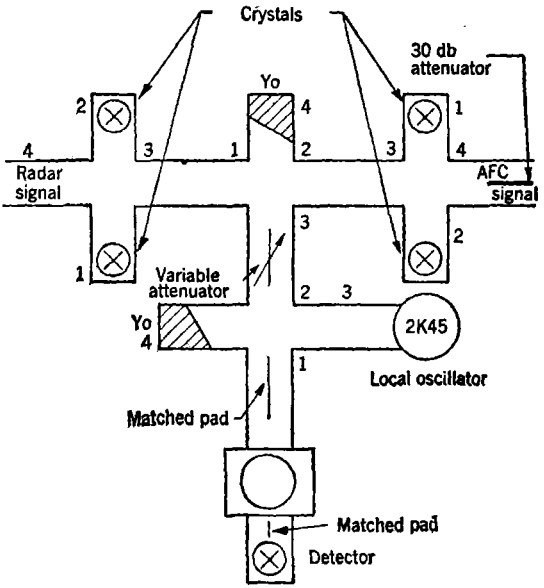

FIG. 6·23.—Double balanced mixer with beacon-AFC cavity and detector. In this mixer a single thermally tuned oscillator is used for both radar and beacon reception.

thermally tuned local oscillators have usually been used. In the 3-cm band, for instance, the 2K45 tube, which can be tuned electronically from 3.13 to 3.53 cm, is useful for this purpose. With such an oscillator tube it is not necessary to add a second oscillator for beacon reception. Instead, the single oscillator is tuned electronically to receive either the beacon signal or the radar signal depending upon which AFC circuit is operative. When the AFC circuit is actuated by the balanced AFC mixer, the oscillator is controlled at the correct frequency to receive radar echoes. On the other hand, a beacon reference cavity and detector crystal may be added and used to control the oscillator at the right frequency to receive beacon signals. Such a reference cavity may be

added in place of the short circuit behind the tube antenna in the ordinary tube mount, as for a separate beacon oscillator. It is also possible to add the beacon reference cavity by means of another magic T, as illustrated symbolically in Fig. 6·23. The magic T provides independence between the two circuits in such a way that reflections in the cavity circuit do not affect the power delivered to the mixers. A pad between the magic T and the cavity reduces the interaction between the cavity and the oscillator. Consequently, the load on the beacon cavity need not be so heavy as in the application without the input-circuit pad. In this circuit the steepness of slope in the transmission characteristic of the cavity is sacrificed to some extent to gain decoupling in order to reduce pulling of the resonant frequency of the cavity by the external circuits. The formulas of Sec. 4·11 still apply, since the magic T between the oscillator and the cavity is equivalent to 3 db of matched-attenuator padding.

CHAPTER 7

FREQUENCY CONTROL OF LOCAL OSCILLATORS

By Eric Durand

In the first chapter (Sec. 1·2) it was shown that the allowable percentage frequency drift is much smaller in microwave receivers than in those designed for lower frequencies. Furthermore, many microwave oscillators are inferior in percentage stability. In some cases radar gear must be operated by the pilot of a plane, who cannot spare the time to maintain correct tuning manually. For these and other reasons, the need for automatic frequency control (AFC) became apparent early and at present AFC is used in nearly all equipments. This chapter[1] will consider the causes of frequency drift and methods for minimizing its ill effects through AFC.

7·1. Sources of Frequency Drift.—In most microwave receivers, the pass band of the r-f components is much wider than that of the over-all receiver. The center frequency of the pass band of the i-f amplifier is very stable compared with the beat note at intermediate radio frequency. Consequently, a receiver once tuned will operate at full efficiency as long as the frequency difference between local oscillator and transmitter has the correct value.

Oscillators of three types are in common use at microwave frequencies: the magnetron, the velocity-modulation tube, and the triode lighthouse tube. Each is governed by a resonant circuit having effective inductance and capacitance. Although lumped constants are not used, as in the case of low-frequency oscillators, the same fundamental criterion for operating frequency applies, namely, that the over-all impedance around the feedback loop shall be equal to zero. Changes in resistance produce changes in amplitude, while changes in reactance cause a shift to a new frequency at which the net reactance is again zero.

For practical purposes, factors affecting circuit reactance may be divided into three classes:

1. Geometric factors, in which the effective inductance and capacitance of the oscillatory circuit are changed directly through mechanical motion.
2. Pulling factors, in which reactance is coupled into the oscillatory circuit from the load.

[1] See also Vol. 23, Chap. 3.

3. Pushing or electronic-tuning factors, in which reactance is introduced by changes in electrical conditions, such as voltage, current, or magnetic field.

Here we are concerned with geometric factors deliberately introduced through a tuning mechanism only in so far as the mechanism is affected by the ambient conditions of temperature, pressure, and vibration. Magnetrons, whose resonant circuits are carved of solid copper blocks, are geometrically stable except for a drift of a few megacycles per second during warmup. They are, however, affected by both pulling and pushing.

The *pulling figure* of an oscillator (see also Vol. 7) is defined as the maximum change in frequency when a load having a voltage standing-wave ratio (VSWR) of 1.5 is presented in all possible phases to the tube. Pulling figures in the 10- and 3-cm bands range from 10 to 15 Mc/sec, while at 1 cm, values lie between 25 and 30 Mc/sec. At low frequencies, pulling may be avoided by the use of a buffer amplifier. High-power microwave amplifiers, however, do not exist, and the microwave transmitter is therefore coupled directly to the antenna line. Consequently, pulling may occur during scanning because of reflections in the line caused by off-center rotary joints, reflections of energy into the antenna from radomes or other nearby objects, lobe switches, or variable antenna-feed devices such as wobbled feeds or variable-width leaky-waveguide antennas. The last-named antennas are very troublesome because the standing-wave ratio often suffers large fluctuations when the reflections from the individual radiating elements all add in phase.

The amount of transmitter pulling is variable. Low-gain antennas are particularly troublesome since their diffuse pattern makes reflection back into the line almost unavoidable. Thus, in the 1-cm band, in spite of the large pulling figure, pulling is usually negligible because of the high antenna gains commonly used.

The *pushing figure* of a magnetron is defined as the frequency shift, in megacycles per second, per ampere change in magnetron current. The figure is negligible in the 10-cm band, around 1 Mc/sec per amp in the 3-cm band, and 2 Mc/sec per amp in the 1-cm band. With reasonably well-regulated primary supplies, pushing offers no AFC problems.

The resonant frequency of the cavity of a velocity-modulation tube is altered by changes in either the cavity volume (inductance) or the space between the grids (capacitance). For our purposes, only the capacitance change is significant. Geometric changes in grid spacing are caused by thermal expansion and, in the case of airborne gear, by changes in barometric pressure. The magnitude and polarity of thermal changes depend on the detailed design used; in some cases, excellent compensation is possible. Tubes in which the tuning range is covered

by the use of a thermal strut (see Sec. 7·2) are likely to show large drifts caused by temperature changes. Tubes such as the 2K45 and the 2K50, which have built-in triodes to energize the thermal strut, are very sensitive to triode heater voltage. The end effect here is geometrical, although the immediate variable is a voltage.

Pulling, in local oscillators, is seldom a problem since the r-f geometry is fixed. A special difficulty arising from the use of precision reference cavities as AFC standards has been treated in Chap. 4.

Pushing, in local oscillators, is commonly referred to as electrical or electronic tuning. In triodes very little electronic tuning is available without serious deviation from optimum conditions. Velocity-modulation tubes, however, may be tuned many megacycles per second by variation of either accelerator or reflector voltage. This property offers little difficulty as a source of drift since well-regulated power supplies may be used. In fact it is a means of tuning well suited to either manual or automatic control of frequency.

7·2. Properties of Local Oscillators for Frequency Control.—As was pointed out at the beginning of the previous section, control of the frequency difference between the local oscillator and the transmitter is sufficient to maintain correct tuning of a microwave receiver. Because it is usually far easier to tune a local oscillator than a transmitter, the former is usually chosen for control purposes.

Corresponding to the three mechanisms for producing frequency changes, there are three types of control that may be applied to the local oscillator. Geometric control may be exercised either by straight mechanical devices operating through motor-driven tuning mechanisms or by the use of thermal expansion. Pulling control can be used by locking the oscillator to a stabilizing cavity. In such a system there is no AFC per se, but only frequency stabilization. The use of reactance tubes, which is common at low frequencies and perhaps possible in the 10-cm region, is a means of utilizing the principle of pulling since the reactance tube injects reactance across the tuned circuit in much the same manner as does a reactive load. Electronic tuning is commonly effected by control over the reflector voltage of a reflex velocity-modulation (VM) oscillator. Typical reflex oscillators may be tuned anywhere from ± 30 Mc/sec to ± 60 Mc/sec before the output power is cut in half. The tuning sensitivity of such tubes ranges from 1 to 4 Mc/sec per volt in the higher range of frequencies, with large variations within any given type. A complete discussion of electronic tuning will be found in Vol. 7.

Geometric control is relatively slow whereas response in electronic tuning is essentially instantaneous. Control circuits are accordingly quite different as will be seen in later sections.

A number of thermally tuned reflex oscillators are now available. One example of the type is the 2K50, which operates in the 25,000-Mc/sec band. The essential features of the tuning mechanism are shown in Fig. 7·1. It operates in the following manner. When the bias on the tuner triode grid G is reduced, current flows to the plate P, causing its temperature to rise. The resulting expansion of P distorts the triangle abc, causing the apex a to pivot downward about c. Since the apex is welded to a metal sleeve S, which, in turn, is welded to the upper plate D of the resonant cavity, this motion is transmitted to the cavity, and causes

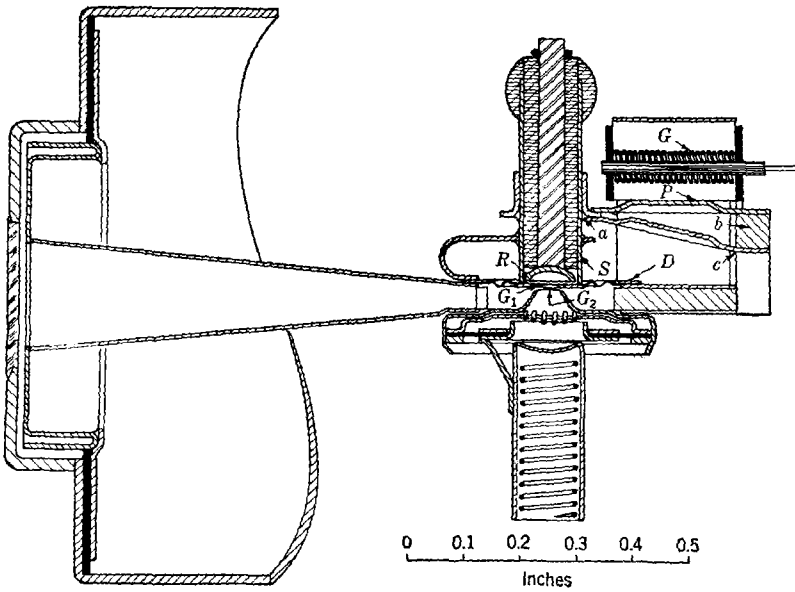

FIG. 7·1.—Thermal-tuning mechanism of the 2K50 oscillator.

the upper grid G_1 to approach the lower grid G_2. This reduces the operating frequency. It will be noted that the reflector R, which is inside of a ceramic cylinder cemented inside of S, maintains a fixed distance from G_1.

The 2K50 will tune from 1.21 to 1.29 cm (about 2000 Mc/sec) with 6 watts of triode plate dissipation. The thermal time constant is about 1.7 sec; consequently the maximum tuning rate at either end of the band toward the other end is 1300 Mc/sec per sec, and at band center, 650 Mc/sec per sec.

The 2K45 operates in the 10,000-Mc/sec band. The tuning mechanism is somewhat different from that of the 2K50 but gives the same results. The tube also covers a 2000-Mc/sec range with 6 watts of

triode power, but the time constant is about 8 seconds, giving a maximum tuning speed at band center of 125 Mc/sec per sec.

Two properties of these thermal tubes introduce new problems in AFC and have necessitated the introduction of new circuits radically different from those previously used for reflector AFC. The first of these properties is the time delay that occurs between the application of a control voltage to the triode grid and the attainment of equilibrium of the oscillator frequency. This delay fixes an upper limit to the rate at which the AFC can follow a disturbance, and even this limit cannot be reached unless the strut power is turned fully off or fully on when a frequency shift is required. The new circuits utilize this "on-off" principle. The second property is the wide tuning range afforded. The tubes will oscillate over a range of several hundred megacycles per second at a single value of reflector voltage. This introduces the problem of possible locking to the "wrong sideband" as will be shown in Sec. 7·10.

A particularly troublesome feature of thermal tubes with built-in triodes is the dependence of the frequency on the triode heater voltage. Because of thermal inertia, changes in frequency from this cause are always slow and can be readily compensated for by the AFC. If, however, one wishes to have manual tuning, for instance (to allow operation in the event of AFC failure), it is necessary to regulate the heater voltage closely. Ballast tubes are of some help, but for good regulation an electronic device is necessary. One scheme is to drive the heater by means of a stable oscillator operating from the electronically regulated LO accelerating voltage.

7·3. Classification of AFC Systems.—There are two main classes of AFC systems: *difference-frequency* (D-F) systems and *absolute-frequency* (A-F) systems. D-F systems are those which maintain a constant frequency difference between local oscillator and transmitter, and A-F systems are those which hold the local oscillator to a fixed radio frequency.

The conventional AFC of a home broadcast receiver[1] is an example of a D-F system, since the comparison between local oscillator and received signal is made at the intermediate frequency, and errors in the frequency of the resultant i-f beat are used to control the local oscillator.

The crystal-controlled fixed-frequency receivers used in commercial communications are examples of A-F systems. In microwave receivers, the function of such crystals is performed by precision cavities, and complex control circuits are required.

The type of system required depends on the problem involved. In normal radars, samples of the transmitter signal are at hand, and variation in transmitter frequency is expected. A D-F system is therefore

[1] F. E. Terman, *Radio Engineer's Handbook*, McGraw-Hill, New York, 1943, Sec. 9, p. 654.

clearly necessary. On the other hand, for the reception of beacons, no signal is available until the beacon transmitter has been triggered. Therefore, the receiver should be always in tune. Tuning can be maintained only by the accurate control of beacon transmitter frequency coupled with A-F stabilization of the local oscillator.

Again, in home receivers any one of many carriers must be received, which eliminates the possibility of A-F control; in fixed-frequency receivers, the signal should not be lost during a fading spell or a noise burst, so that A-F control is desirable.

In addition to classification according to the frequency to be controlled (that is, intermediate frequency or radio frequency), classification according to control circuit is useful. In particular, each of the specific systems mentioned above requires that the local oscillator be tuned very close to the desired frequency before control is established; that is, these systems have a small "pull-in" range. Once locked, a much larger drift tendency may be overcome; that is, the systems have a large "hold-in" range. These, then, are *nonhunting* systems.

It is possible in either D-F or A-F systems to cause the local oscillator to sweep over a large band of frequencies in order to find the correct operating point. When the local oscillator is used in such a way, the system is known as a *hunting* system, and the pull-in range may approach or even equal the hold-in range. Hunting systems become useful when two conditions exist: (1) the expected drifts are large compared with the receiver bandwidth, and (2) there is no possibility of signal confusion (locking to wrong transmitter, etc.). Since both of the conditions usually apply, most AFC systems developed for radar receivers have the hunting feature.

The balance of this chapter will treat hunting and nonhunting difference-frequency systems, and absolute-frequency hunting systems. Corresponding to the greater effort spent in their development, emphasis is placed on D-F hunting systems suitable for pulsed transmitters rather than on A-F and nonhunting systems for c-w transmitters. It is recognized, however, that the latter will play an increasingly important role in postwar work.

DIFFERENCE-FREQUENCY SYSTEMS

7·4. The AFC Feedback Loop.—The basic operating principles of a difference-frequency AFC system are illustrated in the block diagram of Fig. 7·2. Samples of the transmitter signal f_T and the local oscillator signal f_{LO} are applied to a mixer. The resultant i-f signal is amplified and applied to a *discriminator*. This produces an *error voltage* whose polarity depends on whether the intermediate signal frequency is above

or below the *crossover frequency* and which is zero at crossover, as shown in Fig. 7·3. The error voltage is amplified and applied to a control circuit which transforms it into a *control voltage*[1] suitable for changing the LO frequency. Polarities are such that any deviation from crossover produces a correction voltage tending to offset such deviation. It can

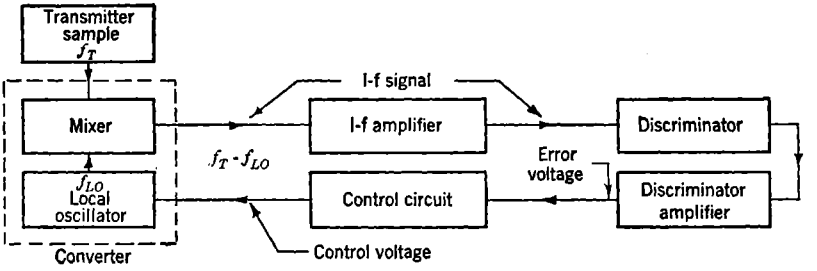

FIG. 7·2.—Block diagram of AFC loop.

be seen that such a circuit is essentially an inverse feedback loop, and therefore, the Nyquist theorem[2] applies.

In particular, if the loop is broken between the discriminator and the control circuit, an alternating voltage applied to the control circuit will reappear, modified in both phase and amplitude, at the discriminator output terminals. By Nyquist's theorem, the system will be stable provided the over-all gain is less than unity at each frequency for which the two voltages are in phase. For the normal operating frequencies, the gain will be large for high stability, and the phases 180° apart corresponding to the negative feedback.

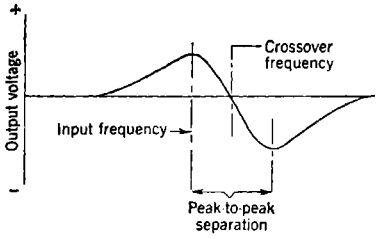

FIG. 7·3.—Discriminator characteristics.

Most of the differences between hunting and nonhunting systems are in the control circuits. The next sections treat in detail those features common to both. Most of the emphasis is placed on systems with near-by pulsed transmitters, partly because these are more complex than those with remote or c-w transmitters, and partly because much material on the latter systems is already in the literature.

7·5. The Transmitter Sample.—When, as in a communications receiver, the transmitter is remote, the normal received signal must be

[1] See Sec. 7·7 for a more general definition of these terms.

[2] Nyquist "Regeneration Theory," *Bell System Technical Journal* **11**, 126 (January 1932).

used. It is customary to utilize the main receiver channel, up to and including the last i-f stage, without modification. The simple detector is replaced by a discriminator (Sec. 7·7) which generates the necessary error voltage. Normally, no changes in the r-f, mixer, and i-f stages are required although, occasionally, a separate i-f channel is used to obtain greater bandwidth.

In a radar set the transmitter is near by. At first glance this would seem to simplify the problem since a constant source for sampling is available. It proves, however, to add a whole new set of problems brought about by the excessive power which may reach the receiver unless special care is taken.

Experience has shown that in pulsed-radar sets an overwhelming majority of AFC failures result from improper r-f conditions. Usually they take the form of an improper *quantity* and *quality* of transmitter sample reaching the AFC crystal (which may be either the main receiver crystal or a separate crystal).

When a very large signal is applied to a silicon rectifier, it begins to pass current in the backward direction. The "back resistance" falls until it approaches the value of the "forward resistance." Consequently, the rectification efficiency of the crystal approaches zero. If we observe the rectified current as a function of a-c input power we obtain a curve such as is shown in Fig. 7·4, which has a real maximum, with decreasing output current for very large input powers.

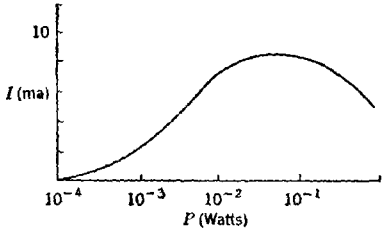

FIG. 7·4.—Typical rectification characteristic of a silicon crystal-rectified current vs. input power.

A typical radar pulse is really more or less trapezoidal in shape, as shown in Fig. 7·5*a*. The effect of impressing such a pulse on the characteristic of Fig. 7·4 is shown as a function of pulse amplitude in Figs. 7·5*c*, *d*, and *e*.

It can be seen from a Fourier analysis that this *video* pulse from the crystal, even if it has the simple shape shown in Fig. 7·5*c*, will contain energy components at the intermediate frequency. The amount of energy at this frequency is, however, 30 db or more below the normal i-f level. Under overload conditions, the pulse will have the form shown in curve *d* or even curve *e* of Fig. 7·5. In this case, there will be large amounts of energy at the intermediate frequency, which in some cases will exceed the desired energy and result in the continuous generation of error voltage, even when the local oscillator is completely dead. This spurious error voltage can be regarded as being produced by a shock

excitation of the i-f circuit. It has sometimes been referred to as "video hash."

There are also found, in the output voltage from the crystal, components whose frequencies are integral multiples of the difference between the frequencies of the local oscillator and transmitter. Such harmonic signals, or "harmonic hash," may be generated by the nonlinearity of the crystal, or they may be caused by the beating between harmonics of the transmitter and the local oscillator. Spurious control information results when the frequency difference between the two oscillators is a submultiple of the intermediate frequency.

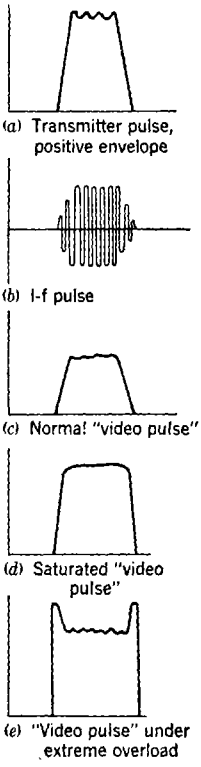

FIG. 7·5.—Generation of shock excitation.

If the local-oscillator frequency is swept through the region around the transmitter frequency, a series of pulses is obtained. Figure 7·6 shows how these look with and without spurious control signals of each of the kinds mentioned above. One may produce these characteristics experimentally by applying a linear sweep voltage to the frequency-control electrode of the local oscillator and to the horizontal plates of an oscilloscope, and by applying the discriminator output voltage to the vertical plates through a suitable amplifier.

The relative importance of each type of spurious signal increases with increasing transmitter-sample power. Experiments with crystals at 10,000 Mc/sec and 25,000 Mc/sec show that they both become troublesome if the r-f power at the crystal exceeds a few milliwatts. Also, the desired signal increases but slowly at these levels. An operating level between 1 and 2 mw is therefore desirable. The partial saturation at this level makes the signal output voltage fairly independent of input power. On the other hand, spurious signals are at least 20 db below the desired signal. Furthermore, if one tries to operate below 1 mw, the spurious signal decreases but slowly whereas leakage soon becomes intolerable, and extra i-f gain is necessary.

Accurate control of gain up to the error-voltage generator is clearly needed. If the gain is too low, locking occurs, if at all, near the peak of the discriminator curve, well away from crossover (see Fig. 7·3). If it is too high, spurious signals will cause locking either completely out of the band (transient response) or at one half, one third, etc., of the intermediate frequency (harmonic response).

Leakage is particularly troublesome in automatic frequency control. There are two sources: (1) bad joints (choke joints, backs of crystals), and (2) inadequate cross attenuation, which allows TR leakage power to reach the AFC crystal through the common coupling provided by the local oscillator. Leakage power and the sample power introduced deliberately are coherent and add vectorially in amplitude. Thus if

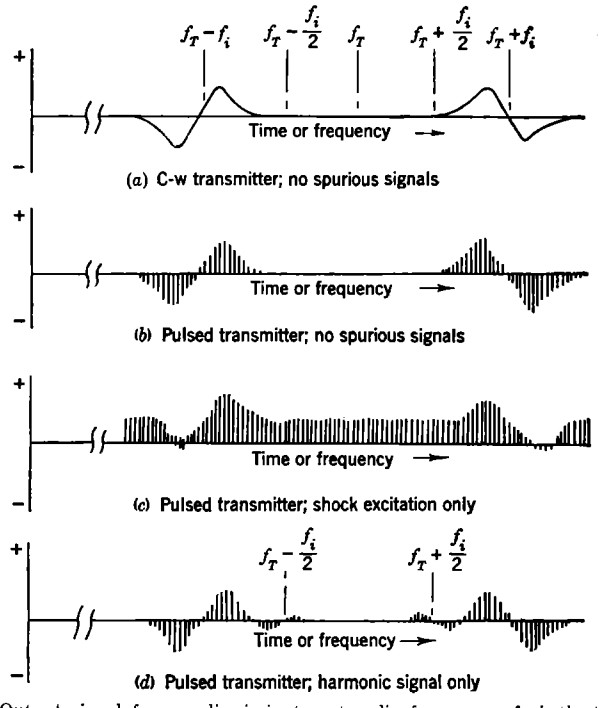

FIG. 7·6.—Output signal from a discriminator at radio frequency; f_T is the transmitter frequency; f_i is the intermediate frequency.

the two are equal, the net power may range from zero to four times the desired power, according to the phases.

The importance of leakage becomes apparent when one considers that the power in the main transmitter line may be as high as 1 megawatt, while the amount allowed to reach the crystal through leakage should be less than $\frac{1}{4}$ mw, a difference of 96 db.

7.6. Mixers, Local Oscillators, and I-f Amplifiers.—In early radar sets a single mixer was used, and the transmitter sample was the power leaking past the TR switch. The first two stages of the main receiver served as i-f amplifier, and only three or four additional tubes were

needed: one or occasionally two i-f amplifier stages, and two control tubes. A typical AFC chassis circuit of the "d-c amplifier" type is shown in Fig. 7·15. The use of a gas-discharge-tube control circuit (Fig. 7·18) was also common.

In its simplest form, single-mixer AFC suffers three serious drawbacks. First, the power reaching the crystal is much too high (20 mw or more), giving rise to spurious signals caused by shock excitation. Second, the 20-mw "flat" is preceded by a short high-energy "spike" which gets past the TR tube before it has had a chance to fire. This generates transients. Moreover any harmonic energy present in the transmitted signal may be passed by the TR switch in the fired condition. Finally, the system is subject to control by energy reaching the antenna between transmitter pulses. In practice, this results in echoes from nearby objects ("ground clutter," and so forth) producing control information. The effective gain of the system therefore depends on whether the antenna points toward the horizon or toward the sky. Also, the AFC may lock to the wrong transmitter either accidentally from a friendly system or as a result of enemy jamming.

By the use of more elaborate devices, some of these difficulties may be overcome. Bell Telephone Laboratories have developed a "spike-blanking" circuit in which the leading edge of the video pulse at the primary of the transmitter pulse transformer is differentiated and applied to the cathode of one of the i-f stages. The positive pulse thus produced cuts off the stage during the time of the TR spike, but allows it to recover for the balance of the transmitted pulse. Bell Telephone Laboratories have also used an "enabling" circuit to reduce the effects of echoes. Again the primary video pulse is used, undifferentiated. It is reduced to about +120 volts in amplitude and applied to the screen and plate of one of the i-f stages. Since this stage has no other source of d-c power, it is dead except during the transmitted pulse, so that the signals entering the antenna between pulses are ineffective. Figure 7·15 shows how these triggers are introduced.

With these modifications, reliable operation may be achieved in some cases. No control over the flat part of the TR leakage power is possible, however, and many system designers have gone over to *double-mixer*, or *separate-channel* AFC.

In the separate-channel system, a small fraction of the transmitted pulse is coupled out to a separate crystal which drives a separate i-f amplifier. Thus, the power reaching the crystal may be adjusted to the optimum value and will be "spike-free." Because of the high attenuation, signals entering the antenna cannot reach the AFC crystal. The design and operation of the r-f components involved in separate-channel AFC have already been discussed in Chaps. 4 and 6.

Further improvement in AFC reliability may be obtained by the use of a balanced mixer (Sec. 6·8). Since a balanced mixer is customarily used in conjunction with a similar mixer for the main receiver, the resulting unit is commonly called a "four-crystal mixer." In the four-crystal mixer, TR leakage power and the resultant transients, and all harmonics of even order generated in the crystals are balanced out. Only stray leakage and harmonics generated by the oscillators remain as problems. Harmonics of third and higher orders are normally negligibly small.

The method of obtaining the transmitter sample in a separate-channel system is important. Usually, a small coupling hole in the side of the transmitter line is used, although occasionally directional couplers (Vol. 11, Chap. 14) are used to make the sample-power level independent of standing waves in the antenna line. Only part of the necessary 75 to 90 db of attenuation may be thus provided. Often, from 20 to 40 db more is obtained from a dissipative pad inserted directly in the mixer. This pad serves to provide a matched line looking out from the mixer, and to reduce the effects of leakage into the line in front of the pad.

The coupling hole is a waveguide beyond cutoff and may be a waveguide *within cutoff* for harmonic frequencies. Thus, a small percentage of harmonic content in the transmitter output may become a large or even a dominating fraction of the power in the AFC line. Because this harmonic energy may be so large as to generate transients, its elimination is most important. To attenuate the harmonics, a resistance strip or a polyiron plug may be inserted in the coupling hole.

Little need be added about local oscillators. Many of their properties were discussed in Sec. 7·2, and the problems of coupling them into mixers are covered elsewhere (Chap. 4). The amount of power that should be applied to the AFC crystal from the local oscillator is governed by the fact that it should differ from the power from the transmitter by at least a factor of 3, in order to reduce the amount of harmonic generation by the crystal. It is clear that the local-oscillator power should be the lesser of the two. First, there is seldom any power to spare in reflex oscillators; and second, the higher the transmitter power at the crystal, the less important is a given amount of leakage power. Thus, in normal parlance, the transmitter serves as local oscillator, and the real local oscillator serves as signal.

A local-oscillator power level of about $\frac{1}{2}$ mw is desirable and also convenient, since it is also the approximate power required for a main receiver crystal and so the two crystal currents may be set to the same value. If a magic T is used to divide the power among the crystals, as in a four-crystal mixer, a single adjustment will suffice, and all crystals will receive equal power.

The i-f output signal of an average crystal operating under the conditions outlined above lies between 0.25 and 0.50 volt rms. Since this is inadequate for a discriminator, one or more stages of i-f amplification are used. The bandwidth requirement of the i-f amplifier is governed by the discriminator bandwidth, which should be slightly less than, or equal to, the over-all receiver bandwidth. The receiver bandwidth, in turn, is governed by the system pulse-length or modulation requirements. Since typical radar bandwidths lie between 1 and 8 Mc/sec to the half-power points, the gain per stage is usually low. Furthermore, it is now considered good practice to make the AFC i-f channel considerably wider than the discriminator peak-to-peak separation to remove the necessity for complete realignment when the discriminator crossover frequency is shifted. This makes possible the adjustment of the AFC locking frequency with a single control. With the system locked to AFC, this control may be tuned for maximum performance.

Gain at the intermediate frequency is expensive, whereas gain after detection is cheap, since, in most cases, the video pulses have been greatly "stretched," and hence the video bandwidth requirements are low. It does not pay, however, to overwork this idea. The video input signal should be approximately 1 volt in order to be large compared with stray pickup. For pulses longer than 1 or 2 μsec, a single i-f stage preceding a conventional dual-diode discriminator will suffice. For pulses between $\frac{1}{4}$ μsec and 1 μsec, two stages may be needed, while still shorter pulses may require three or more. In the latter case, extra bandwidth may be obtained by staggering the center frequencies of the first two stages (Vol. 18). A voltage gain of four or more is possible in the circuit between the crystal and the first amplifier grid. This extra gain involves extra alignment problems, however, and a single-tuned circuit with unity gain may be preferable.

Symmetry in the i-f amplifier is far more important in the AFC channel than in the signal channel. The i-f spectrum of a short pulse contains sideband energy on either side of its center frequency. If the amplifier is asymmetrical, the over-all discriminator characteristic will likewise be asymmetrical, and the sidebands will not be canceled out at crossover.

7·7. Discriminators.—The characteristic curve of a discriminator shown in Fig. 7·3 is not of the most general possible type. For one thing, the zero referred to may be at some d-c level other than ground potential. For the purposes of this chapter, the zero to which polarities are referred is the d-c voltage existing at the output terminals when there is no signal at the input terminals. Crossover frequency is that frequency lying between the two output peaks for which the output voltage is zero. If the i-f input signal consists of continuous waves, the output voltage will be d-c;

if it consists of a series of short pulses, the output voltage will consist of a series of pulses whose amplitude and polarity follow the scheme shown in Fig. 7·3. In the special case of the beacon AFC described in Sec.7·18

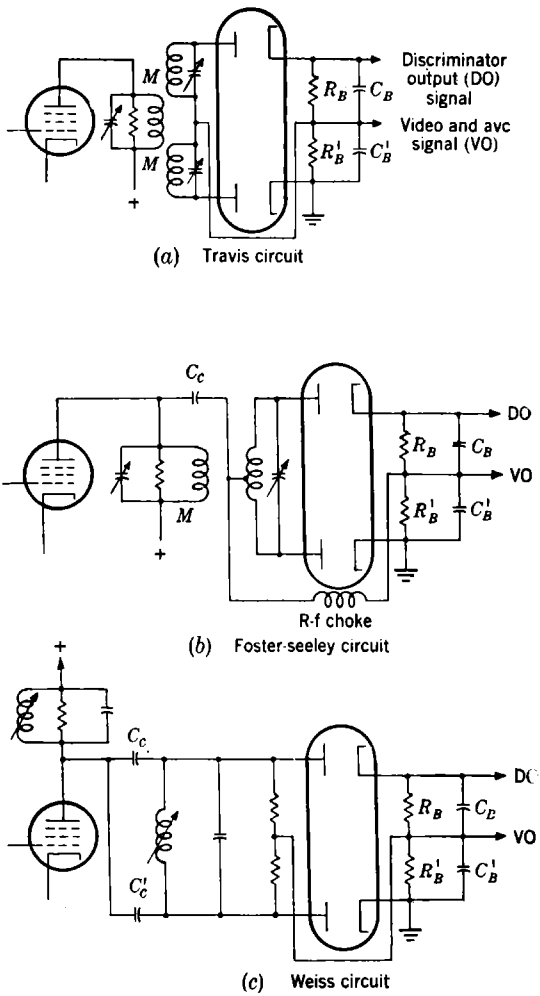

FIG. 7·7.—Discriminator circuits.

the output voltage varies sinusoidally. Change of polarity is replaced by a 180° reversal of phase, but if plus and minus are taken to mean one or the other phase, Fig. 7·3 still applies.

Three types of i-f discriminators are shown in Fig. 7·7.[1]

The Travis circuit depends on the action of two resonant circuits, one tuned above the desired crossover frequency and one tuned below it. Detectors across the two circuits are connected back to back. The individual and sum voltages developed by the detectors are shown in Fig. 7·8. It should be noted that the individual resonant elements are double-tuned. Hence, if close coupling is used, each side of the discriminator characteristic may be double-humped. This is not possible in either of the other circuits. If the peak-to-peak separation is too great for the circuit Q's in any of the circuits, the characteristic will have a "chair," as shown in Fig. 7·8*d*.

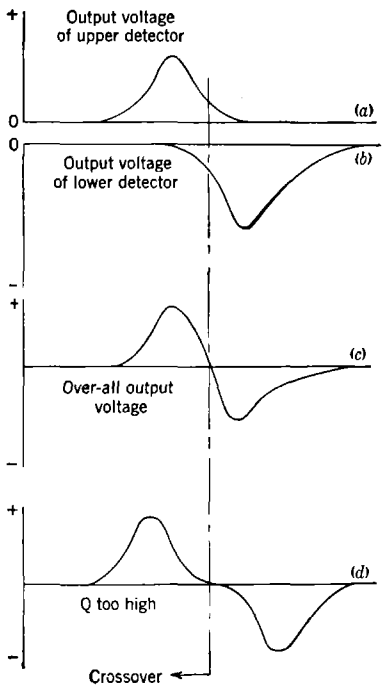

FIG. 7·8.—Operation of Travis discriminator.

Three factors must be adjusted: the crossover frequency, the peak-to-peak separation, and the symmetry. In the Travis discriminator the crossover is shifted by tuning the two resonant elements in the same direction, while separation is changed by tuning them in opposite directions. The other circuits, on the other hand, have separate, independent crossover and separation adjustments. The characteristic is symmetrical if the i-f amplifier pass band is symmetrical, and if the discriminator primary is tuned to the crossover frequency. In addition, the Travis circuit requires that the individual circuit bandwidths be equal. The adjustment of the primary circuit of the discriminator is commonly called the symmetry control. It may be used to offset the slight inherent asymmetry which arises from the unbalance of the discriminator with respect to ground potential (see Sec. 7·8).

The Foster-Seeley discriminator of Fig. 7·7*b* has been well covered

[1] D. E. Foster and S. W. Seeley, "Automatic Tuning, Simplified Circuits, and Design Practice," *Proc. I.R.E.*, 25, 289, March 1937.

Hans Roder, "Theory of the Discriminator Circuit for Automatic Frequency Control," *Proc. I.R.E.*, 26, 590, May 1938. Charles Travis, "Automatic Frequency Control," *Proc. I.R.E.*, 23, 1125, October 1935.

in the literature and will not be treated here beyond noting that the mutual inductance determines the peak-to-peak separation and that the crossover frequency is the resonant frequency of the secondary circuit. At the frequencies commonly used for i-f amplifiers in microwave receivers, little if any lumped capacitance is added. The distributed capacitances of the diodes, in series, comprise the bulk of the tuning capacitance.

The Weiss discriminator of Fig. 7·7*c* was developed at the Radiation Laboratory in an attempt to reduce the detrimental effect of stray capacitances by making them serve a useful function. It is essentially the capacitance-coupled analogue of the Foster-Seeley circuit. It has been shown experimentally that the two discriminators have substantially identical electrical performance (gain-bandwidth product, susceptibility to stray capacitance, and so forth). The Weiss discriminator, however, requires accurate control over the small difference between the coupling condensers required for a narrow-band characteristic. On the other hand, the Foster-Seeley discriminator suffers at large bandwidths from the large variation in mutual inductance with small displacements of the coils. An analysis of the action of the Weiss discriminator is given in the next section.

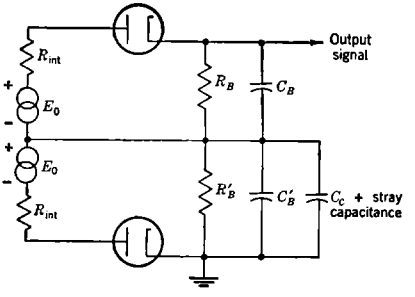

FIG. 7·9.—Equivalent video circuit of a discriminator.

The term "discriminator efficiency" is commonly applied to the ratio of the maximum available output voltage (d-c or pulse) to the peak voltage of the i-f signal at the input terminals. Since voltage stepup is possible, resulting in "efficiencies" greater than unity, such usage is improper. We shall use the term "discriminator voltage gain" to express this factor.

As in a conventional detector with transformer coupling, discriminator gain is affected by a variety of factors, including diode conductance, transformer design, and video load resistance. In addition, when one of the detectors is producing a maximum signal, the other is absorbing some of the available power, and this power, when rectified, balances out part of the signal from the first detector. It can be shown that this balance causes a 30 per cent reduction in discriminator voltage gain under optimum adjustment.

Figure 7·9 is the equivalent video circuit of a discriminator. Consider the action of one of the diodes alone. If a step-function i-f signal is applied to the discriminator, the voltage across the bypass condenser will

rise exponentially with the time constant $R_{int}C_B$.[1] Rise times of the order of 1 μsec are common. When the step function is removed, the voltage across C_B will immediately start to decay with a time constant R_BC_B. Full voltage is reached, therefore, only if the i-f pulse is long. In a typical design the amplitude of the output pulse for a $\frac{1}{4}$-μsec input signal will be about one third that for a long pulse.

Increasing R_BC_B results in a stretching of the pulse. If C_B is increased, there will be a corresponding reduction in amplitude unless the original

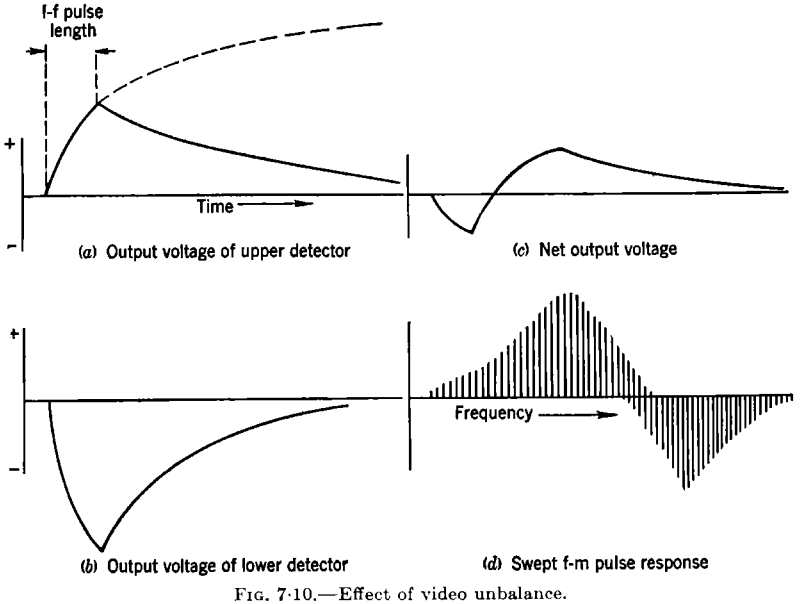

FIG. 7·10.—Effect of video unbalance.

transmitter pulse is long. An increase in R_B produces no such loss of amplitude, but values in excess of about a megohm should be avoided because of grid current in the following amplifier and because of increased hum pickup from the heaters. If the discriminator output pulse is used to operate a hard-tube reversing multivibrator or "trigger circuit," as in the systems of Secs. 7·15 and 7·16, it is unnecessary to stretch the pulse. If it is used to fire a gas-discharge tube (Sec. 7·11) stretching up to about 10 μsec reduces the threshold for firing. If it is used to energize a diode search-stopping rectifier of the type described in Sec. 7·13, its effectiveness is almost proportional to the amount of stretch.

Discriminators should have good video balance. The charge and discharge times of the two bypass condensers should be respectively

[1] R_{int} is taken to include the effective forward resistance of the diode. This is variable, depending both on signal amplitude and on the instantaneous voltage across C_B.

equal. Since the two generator impedances are equal, the effective bypass capacitances should be equal. It should be noted that the total capacitance across the lower detector includes both the coupling condenser C_c of Fig. 7·9 and stray capacitances. Consequently, the actual value of condenser C_B should be 15 to 20 $\mu\mu$f greater than that of C_B'.

Figure 7·10 shows the effect of a moderate video unbalance. Curves (a), (b), and (c) show the waveforms observed across the individual detectors and at the output terminals when a pulse of length τ, at crossover frequency, is applied to the discriminator. The capacitance across the upper detector is assumed to be 30 per cent too large. Because of the difference in the time constants for charging, the peak voltage reached across the upper detector is less than that reached across the

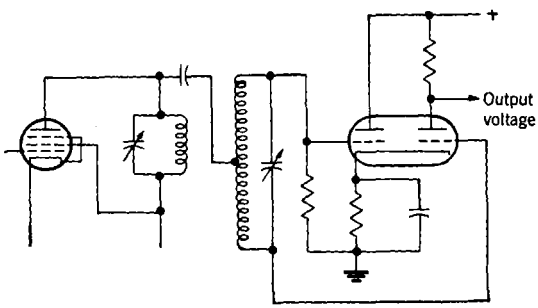

FIG. 7·11.—Foster-Seeley discriminator with Strandberg detectors.

lower detector. At the end of the i-f pulse, therefore, the net output voltage is negative. Because of the difference in the discharge time constants, however, the voltage across the lower detector falls toward zero more rapidly than that across the upper detector. Consequently, after a time, the voltage across the upper detector dominates, and the total output voltage becomes positive. Finally, all charge leaks off, and the voltage becomes zero.

If the signal from a pulsed signal generator (see Fig. 7·6), the frequency of which is varied from pulse to pulse, is applied to such a discriminator, the pattern of Fig. 7·10*d* will be seen on an oscilloscope connected to the output terminals. Near the crossover frequency every pulse will extend on both sides of the axis, and the crossover frequency will no longer be sharply defined. Such a broadening of the crossover is not serious unless the unbalance is severe, in which case the output voltage of one polarity is markedly reduced. A nominal figure of 20 per cent unbalance tolerance is usually stipulated for discriminators that are to be manufactured in quantity. This is readily achieved if the original design is good.

From the foregoing, one might assume that only diodes are used as detectors. Actually, triodes are often used. For instance, Bell Tele-

phone Laboratories have used a pair of plate-circuit or "anode bend" detectors. Since both output voltages are positive, one of them is inverted to give the correct over-all characteristic. A circuit of this type is found in Fig. 7·15. Strandberg[1] has used a plate-circuit detector for one branch and an "infinite impedance" or cathode detector for the

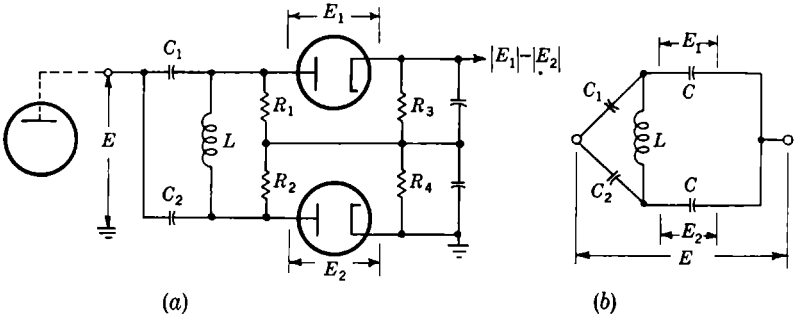

FIG. 7·12.—Circuit and equivalent circuit for Weiss discriminator.

other, the two being coupled by a common cathode connection. The circuit is shown in Fig. 7·11.

The great advantage of these detectors is that they supply the energy necessary to charge the bypass condensers from the power supply instead of from the i-f amplifier. Much greater pulse stretching is possible. Thus, in the circuit of the Bell Telephone Laboratories, the pulse is stretched out until the next pulse arrives, so that almost d-c control signals are obtained. With smaller bypass condensers, the rise time may be made so low that the output voltage is independent of pulse length even for pulses less than 0.1 μsec long.

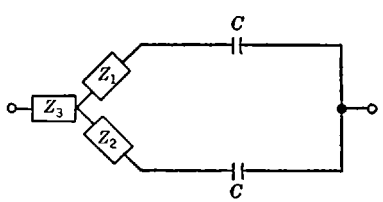

FIG. 7·13.—Equivalent circuit for Weiss discriminator after π-to-T transformation.

7·8. Discriminator Theory.[2]—A simplified theory for approximate calculation has been developed for the Weiss discriminator. Figure 7·12 shows the basic circuit of the discriminator, its equivalent circuit, and the important voltages. C_1 and C_2 represent the diode capacitances, and the circuit Q's are assumed to be infinite. The first step is the transformation of the π-network $C_1 - C_2 - L$ into its equivalent T-network, shown in Fig. 7·13, where

[1] M. W. P. Strandberg, "A Video-Frequency Modulation Detector," RL Internal Group Report 53, Apr. 1, 1945.

[2] W. Selove, "Frequency Discriminator Analysis," RL Internal Group Report 61, Jan. 1, 1945.

$$Z_1 = \frac{\dfrac{L}{C_1}}{j\left(\omega L - \dfrac{1}{\omega C'}\right)},$$

$$Z_2 = \frac{\dfrac{L}{C_2}}{j\left(\omega L - \dfrac{1}{\omega C'}\right)}, \tag{1}$$

$$Z_3 = \frac{\dfrac{1}{j\omega C_1} - \dfrac{1}{j\omega C_2}}{j\left(\omega L - \dfrac{1}{\omega C'}\right)},$$

and where

$$C' = \frac{C_1 C_2}{C_1 + C_2}.$$

At some angular frequency ω_1, Z_1 will resonate with C, so that all of the current will flow in the upper branch, making E_1 large, and E_2 zero. Similarly, at an angular frequency ω_2, E_2 will be large and E_1 zero. The frequencies ω_1 and ω_2 are very close to that of the peak response. At ω_1

$$\frac{\dfrac{L}{C_1}}{j\left(\omega_1 L - \dfrac{1}{\omega_1 C'}\right)} = -\frac{1}{j\omega_1 C};$$

$$\frac{LC'\omega_1^2}{\omega_1^2 LC' - 1} = -\frac{C_1}{C};$$

$$\frac{1 - \omega_1^2 LC'}{\omega_1^2 LC'} = \frac{C}{C_1}.$$

If

$$LC' = \frac{1}{\omega_0^2},$$

then

$$\frac{\omega_0}{\omega_1} = \sqrt{1 + \frac{C}{C_1}}. \tag{2}$$

Similarly

$$\frac{\omega_0}{\omega_2} = \sqrt{1 + \frac{C}{C_2}}. \tag{3}$$

If, for the sake of argument, it is assumed that $C_1 > C_2$, then $\omega_1 > \omega_2$. For angular frequencies decreasing from ω_1, the impedance of the upper branch increases from zero and is inductive. Similarly, raising the angular frequency from ω_2 causes the impedance of the lower branch

to increase capacitively. Therefore, there exists an angular frequency ω_c at which the two impedances are equal in magnitude but opposite in phase. At this frequency the currents in the branches are equal in magnitude, so that $E_1 = E_2$, and the error voltage is zero. This is the crossover frequency. At ω_0

$$Z_1 + Z_c = -(Z_2 + Z_c),$$

or

$$Z_1 + Z_2 = -2Z_c.$$

Substituting the values for these impedances given in Eq. (1),

$$\frac{L\left(\frac{1}{C_1} + \frac{1}{C_2}\right)}{j\left(\omega_c L - \frac{1}{\omega_c C'}\right)} = \frac{2}{j\omega_c C};$$

$$\frac{\frac{L}{2C'}}{\omega_c L - \frac{1}{\omega_c C'}} = \frac{1}{\omega_c C};$$

$$\frac{\omega_0}{\omega_c} = \sqrt{1 + \frac{C}{2C'}}. \tag{4}$$

Equation (4) shows that the crossover frequency is that frequency at which L resonates with C' and $C/2$, that is, with the total capacitance across L.

An expression for the peak-to-peak separation can be obtained from Eqs. (2), (3), and (4):

$$\frac{\omega_1 - \omega_2}{\omega_c} = \sqrt{1 + \frac{C}{2C'}}\left(\sqrt{\frac{C_1}{C_1 + C}} - \sqrt{\frac{C_2}{C_2 + C}}\right). \tag{5}$$

In some cases, a simplified expression is possible. Starting again from Eqs. (2), (3), and (4), we have

$$\frac{\omega_1^2 - \omega_2^2}{\omega_c^2} = \frac{\frac{C_1}{C_1 + C} - \frac{C_2}{C_2 + C}}{\frac{1}{1 + \frac{C}{2C_1}}}$$

$$= \left(1 + \frac{C}{2C_1}\right)\frac{C(C_1 - C_2)}{(C_1 + C)(C_2 + C)}. \tag{6}$$

Now if the percentage peak-to-peak separation is small, we may write

$$\frac{\omega_1^2 - \omega_2^2}{\omega_c^2} = \frac{(\omega_1 - \omega_2)(\omega_1 + \omega_2)}{\omega_c^2} \approx \frac{2(\omega_1 - \omega_2)}{\omega_c}.$$

Equating this to the right-hand side of Eq. (6), we obtain

$$\frac{\omega_1 - \omega_2}{\omega_c} \approx \frac{C(C_1 + C_2)}{2C_1C_2}. \tag{7}$$

The voltage at each peak can easily be calculated. For example, at ω_1 the current in the upper branch is E/Z_3 and the voltage across the diode is $E_1 = (E/Z_3)X_C$.

$$\left(\frac{E_1}{E}\right)_{\omega_1} = \frac{\dfrac{1}{j\omega_1 C}}{\dfrac{1}{j\omega_1 C_1 j\omega_1 C_2}} j(\omega_1 L - \omega_1 C')$$

$$= \frac{\omega_1^2}{\omega_0^2}\left(1 + \frac{C_2}{C_1}\right) = \frac{C_1 + C_2}{C_1 + C}. \tag{8}$$

Similarly,

$$\left(\frac{E_2}{E}\right)_{\omega_2} = \frac{C_1 + C_2}{C_2 + C}. \tag{9}$$

These equations indicate that peaks of equal amplitude are possible only if $C_1 + C = C_2 + C$, for which condition $E_1 = E_2$ for all frequencies, and the error voltage from the discriminator is zero. The branch having the smaller coupling condenser will have the larger current, and we have already seen that this will be the low-frequency branch. If we make $C_1 < C_2$, then $E_1 < E_2$. We can, however, by restricting the size of the bypass condensers of Fig. 7·12, arrange matters so that not all of the voltage E_1 in the theoretical expression appears across the upper diode. By proper selection of these condensers the two peaks may be made equal. With the diodes connected as shown and $C_1 < C_2$, the upper branch will give positive output voltage at low frequency. If the characteristic is to have the opposite sense, then for the equality of the peaks to be maintained, the diodes themselves must be reversed.

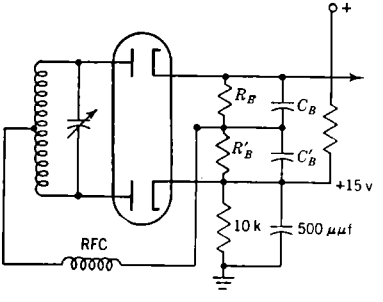

FIG. 7·14.—Circuit for hum reduction.

In any event, the dissymmetry is usually not serious and approximate compensation may be secured by a slight detuning of the resonant circuit normally associated with the primary voltage source E of Fig. 7·12.

It may be noted here that most miniature tubes have a certain amount of leakage conductance between heater and cathode resulting in the appearance of a hum voltage at the cathode of the upper diode, which carries the desired signal. The amount of such hum is variable from tube

to tube and depends on the resistance from cathode to ground. If this resistance is $\frac{1}{2}$ megohm, a common value, the hum may amount to a large fraction of a volt. Fortunately, a bias of either polarity between cathode and heater will cure the trouble. Positive bias on the cathode is particularly effective. If the amount of such bias slightly exceeds the peak value of the heater voltage, the hum will be completely eliminated. This condition may be readily attained by the use of a separate negatively biased heater winding, or by the circuit of Fig. 7·14, which may be applied to any of the discriminators of Sec. 7·7.

NONHUNTING SYSTEMS

7·9. Control Circuits for Nonhunting Systems.—Control circuits for nonhunting systems with c-w transmitters are very simple. Since the characteristic of a discriminator is linear near crossover, the output voltage is a pure d-c voltage whose level and polarity are determined by the frequency error of the local oscillator. As a rule the only requirement is a direct connection between the discriminator and the *frequency-control electrode;* that is, the grid of the reactance tube, or the reflector of the reflex oscillator. Descriptions of many such circuits are to be found in the prewar literature.[1] If the frequency-control electrode is insensitive, a d-c amplifier, preferably push-pull, may be required.

When the transmitter output power consists of short pulses separated by long intervals, as in a radar set, it is necessary to provide only for the stretching out of the pulses that appear at the discriminator, so that their peak amplitude is maintained between pulses.

Figure 7·15 shows the circuit used for AFC in a radar set designed at Bell Telephone Laboratories. This represents a highly developed nonhunting, single-mixer system (Sec. 7·5). It is seen that the output terminals of a conventional Weiss discriminator (Secs. 7·7 and 7·8) are connected to a pair of plate or anode-bend detectors. The plate load resistors are very high and are bypassed by large condensers, giving a time constant of 3.2×10^{-2} sec. Since the interval between pulses in this set is only 2.5×10^{-2} sec for the lowest pulse recurrence frequency, most of the charge developed during the pulse will be sustained until the next pulse. What little ripple remains is filtered out by a large condenser at the reflector of the local oscillator.

The plates of the detectors are connected directly to the grids of a pair of push-pull d-c amplifiers which have a large common cathode resistor. Because this resistor is degenerative for everything except signals on either grid, it increases stability. Control voltage is taken from one of the amplifier plates, the operating range being selected by adjustment of the plate supply voltage.

[1] Terman, *loc. cit.*

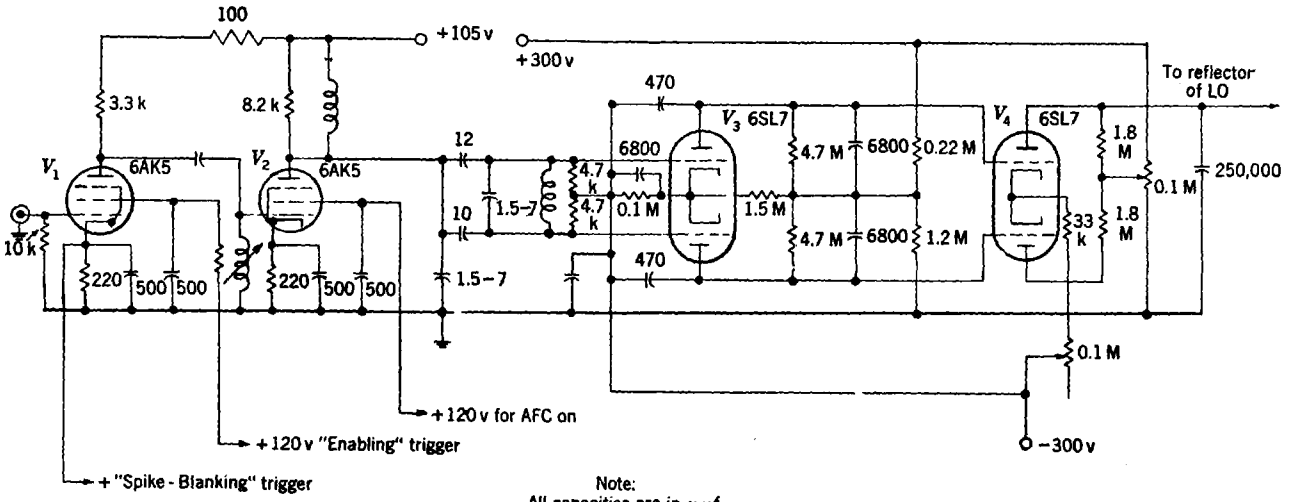

Note:
All capacities are in $\mu\mu$f

FIG. 7·15.—"D-c-amplifier" AFC.

The output voltage of this amplifier will swing at least 25 volts above or below the no-signal level, and is adequate to control a reflex oscillator.

It will be noted that the "enabling" feature discussed in Sec. 7·5 is provided by energizing the first i-f amplifier stage only during the initial transmitter pulse. The trigger for the screen and plate supply of this tube is taken from the primary of the transmitter pulse transformer. Other BTL circuits have also contained the "spike-blanking" feature already considered (Sec. 7·5). The leading edge of the video pulse at the pulse transformer is differentiated to produce a sharp, very short positive pulse, which is applied to the cathode of V_1, cutting this tube off during the first part of the transmitter pulse, during the time when the TR spike comes through. The point at which such a trigger is introduced is also shown in Fig. 7·15.

Other nonhunting systems have been used successfully by the British. An interesting feature of one of their circuits is the "reflexing" of a parallel pair of output i-f amplifier tubes to serve as push-pull d-c amplifiers.

With reference to Fig. 7·6 (*a*), if the connections are so chosen that a positive error voltage tends to reduce the local-oscillator frequency, it is then clear that locking is possible where and only where the discriminator characteristic has a positive slope. In the main pass bands, there are three such regions: one near crossover at the low-frequency sideband and two on the outer skirts of the high-frequency sideband. The latter pair are too far from crossover for satisfactory operation. In this case, then, the high-frequency sideband is the *wrong sideband*. Other types of operation on the wrong sideband will be noted later. It is also possible to lock incorrectly at any one of three places on each pair of harmonic sidebands if the gain is too high. With adequate r-f selectivity, of course, these dangers could be avoided; in nearly every microwave receiver, however, they must be considered.

DRIFT-IN HUNTING SYSTEM

7·10. Basic Theory.—The "*drift-in*" theory of operation is illustrated in the block diagram of Fig. 7·16. During the hunting cycle, only the *slow-sweep generator* need be considered. This generator impresses a sawtooth voltage on the frequency-control electrode, which results in a sawtooth frequency modulation large enough to allow for all possible tuning errors. At some time during the sweep, the crossover frequency of the *desired sideband* will be passed. Information generated at this time will actuate the search stopper which will halt or reverse, as needed, the progress of the slow sweep. There is a perpetual tendency for the frequency to drift off; this tendency is offset by the search stopper. A "wall" may be thought of as existing at the point A in Fig. 7·17 and inhibiting the sweep. Note that here too there is a wrong sideband,

since a similar "wall" exists at B. Each harmonic likewise offers a pair of "walls" for possible locking.

The system is stable, for, if the oscillator frequency tends to drift to the right, the rising discriminator output voltage will develop extra

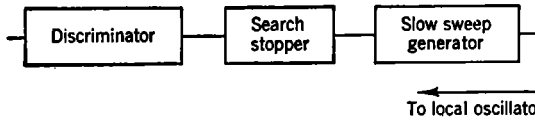

FIG. 7·16.—Drift-in AFC.

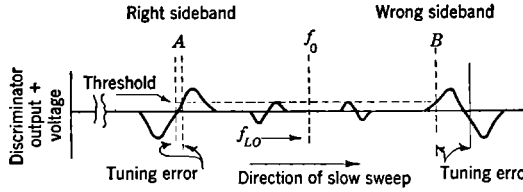

FIG. 7·17.—Right and wrong sidebands.

search-stopping power, pulling the frequency back. Similarly, a shift to the left results in a diminution of search-stopping power, and the normal slow-sweep drift will resume.

7·11. Standard Gas-discharge-tube AFC.—The first AFC for pulse radar developed at Radiation Laboratory used the gas-discharge-tube control circuit of Fig. 7·18. Although this circuit has certain inherent

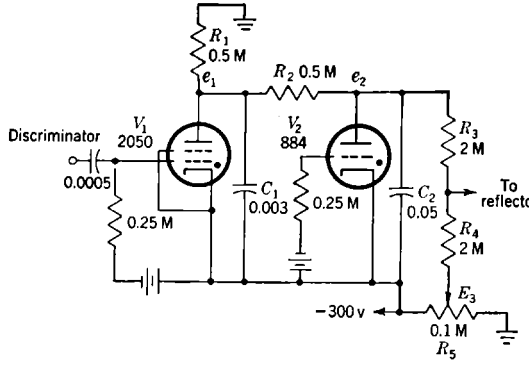

FIG. 7·18.—Standard gas-discharge-tube AFC circuit.

limitations which have necessitated the development of new hard-tube circuits, it is still in wide use and is likely to remain so for some time to come. Because of this, and because no adequate report on it has yet been issued, this circuit will be considered in detail.

V_1 is a gaseous tetrode having the characteristic that the grid voltage necessary to cause breakdown is nearly independent of plate voltage e_{p_1}.

It is so biased as to remain nonconducting in the absence of a positive pulse or trigger from the amplifier that follows the discriminator.

V_2 is a gaseous triode so biased as to fire whenever the plate voltage e_{p_2} reaches a critical value (usually about 200 volts for a 300-volt supply). V_2 is the slow-sweep generator discussed in the previous section. Current flows through R_1 and R_2, charging C_2 until the critical voltage is reached. V_2 then breaks down, discharging C_2 abruptly. Because of the large number of ions formed in V_2 (or later in V_1) during the

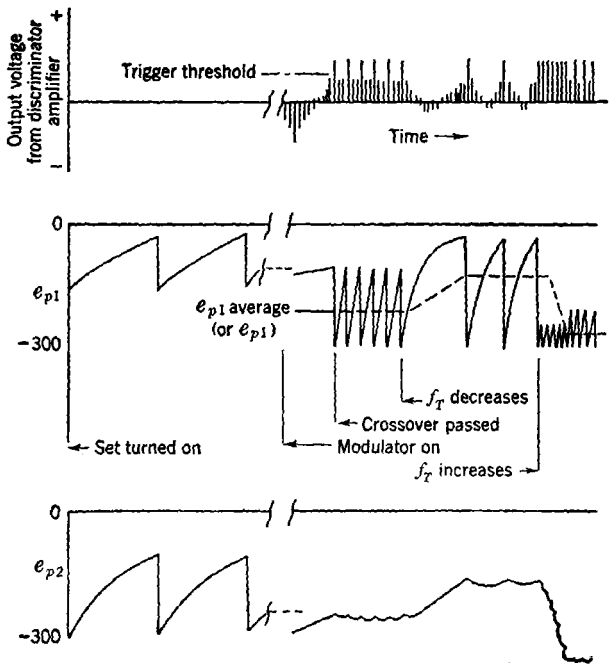

FIG. 7·19.—Voltage-time relationships in gas-discharge-tube AFC.

breakdown, and because of the finite ion-recombination rate, e_{p_2} is carried well below the critical voltage for ion production. Before R_1 and R_2 can recharge C_2 to this voltage, all ions will have recombined. Therefore, the tube will remain nonconducting and the slow upward sweep will resume. This sawtooth sweep voltage, divided down by R_3 and R_4, is applied to the reflector of the reflex local oscillator, causing it to execute a corresponding sawtoothed frequency sweep. C_1, being much smaller than C_2, plays an insignificant role in modifying the sweep.

If the *range-set* control R_5 is properly adjusted, the local oscillator will be swept through the correct operating frequency. At first, negative pulses appear, but as crossover is reached and passed, these disappear

and are replaced by positive pulses. The *first* pulse of sufficient amplitude will fire the search stopper V_1. When this happens, e_{p_1} abruptly drops to some 11 volts above the cathode potential. The flow of current in R_2 is reversed, and e_{p_2} starts to fall. This causes the local-oscillator frequency to move back from the threshold, so that one of the next few pulses to appear will be too small to fire V_1, or may even be negative. Because C_1 is small, however, R_1 and R_2 quickly restore the charge, and the forward sweep resumes until another pulse large enough to fire V_1 comes through.

These effects are shown in Fig. 7·19. The potentials of the two plates at any one time are shown, one above the other. The time scale after locking (to the right) has been expanded manyfold for clarity.

This circuit is an example of the *frequency-control principle.* The control voltage applied to the reflector is determined by the frequency with which V_1 is triggered and is unaffected by the trigger amplitude as long as it exceeds the threshold determined by the bias on the V_1 control grid. Later (Sec. 7·13) we shall consider circuits employing *amplitude control,* in which every pulse is effective, the amount of the effect being proportional to pulse amplitude and thus to the amount of deviation from the crossover frequency.

7·12. Design Theory for Gas-discharge-tube Control Circuits.—In pulsed systems, since control information is available only for short, widely separated intervals, it is necessary to limit the amount by which the LO frequency can shift between successive pulses. This restriction, in turn, limits the speed with which the control circuit can readjust itself to meet new conditions.

In Sec. 7·1 the causes of frequency drift were considered. Of the effects discussed, pulling during the antenna scan is usually the only one that takes place so rapidly as to constitute a following-rate problem. When rapid pulling occurs, the local-oscillator frequency may lag behind its proper place, resulting in mistuning, or it may drop back so far that control information is lost, causing the system to become unlocked.

With reference to Fig. 7·17, pulling may be thought of as causing a displacement of f_0 to the left or to the right, with the discriminator characteristics executing a similar shift. If f_0 shifts to the right, control information will disappear and the local-oscillator frequency will start to drift to the right as the slow sweep resumes. No matter how great the shift in f_0 (within the limits of the control range) nor how fast the shift takes place, the local oscillator will ultimately reach the threshold frequency A, and control will be restored.

If, on the other hand, f_0 shifts to the left, the firing rate of the search-stopping tube (V_1 of Fig. 7·18) will increase up to the limit of one per transmitter pulse, causing the local-oscillator frequency to shift to the

left. If the rate of shift of F_0 is too great, the oscillator will fail to keep up with it and presently will be so far out of tune that the positive pulse from the discriminator amplifier will fall below the threshold, and V_1 will cease firing. Then the slow sweep to the right will resume and the system will be unlocked. This one-sidedness is a characteristic of all drift-in systems.

It might be mentioned here that the "push-pull" systems discussed in Secs. 7·14 to 7·16 can become unlocked as a result of fast shifts in either direction. Nonhunting systems may also become unlocked if a fast frequency shift exceeding the system pull-in range occurs (see Sec. 7·3).

Maximum following rates determine the ability of a system to follow fast frequency shifts. They are usually expressed in megacycles per second per second. They are functions of the value of the oscillator frequency within its control range and are, in general, different for the two directions of frequency shift.

The control circuit determines the maximum rate at which the frequency-control electrode (here, the reflector) voltage may be changed. The corresponding frequency following rate is then determined by the electronic-tuning sensitivity of the oscillator, that is, by the shift in frequency in megacycles per second per volt change on the frequency-control electrode.

In any pulse-operated hunting type of AFC, there is an inherent ripple in the local-oscillator frequency. This is due to the tendency of the oscillator to resume the hunting sweep during the interval between successive pulses and can be reduced only at the expense of reduced following rates. Ripple is usually expressed as the peak-to-peak amplitude of the frequency modulation (in megacycles per second) where the system is in equilibrium and depends, as do the following rates, upon the value of the local-oscillator frequency within the control range.

In a practical design, ripple is usually the factor that limits the following rates. Sometimes, however, it is found that while the hunting sweep is traversing the discriminator characteristic, the control information received is insufficient to stop the sweep although, once the sweep is stopped, locking is possible. The speed of the hunting sweep would then be the limiting factor. The maximum permissible ripple can be calculated from receiver bandwidth and similar considerations, and from this the amount of voltage ripple that can be tolerated on the reflector may be computed. With these data, the following theory may be applied to determine optimum circuit constants.

For the rest of this section, following rates and ripple will be referred to in terms of the reflector voltage. Two voltage following rates are defined: the maximum "down-pull" rate, the rate at which the reflector

voltage becomes more negative when the search-stopping tube is fired at each transmitter pulse; and the maximum "up-pull" rate, the rate at which it becomes less negative when the search stopper does not fire at all. These rates are expressed in volts per second. Ripple will be referred to as the peak-to-peak amplitude of the ripple voltage at the reflector when the system is in equilibrium.

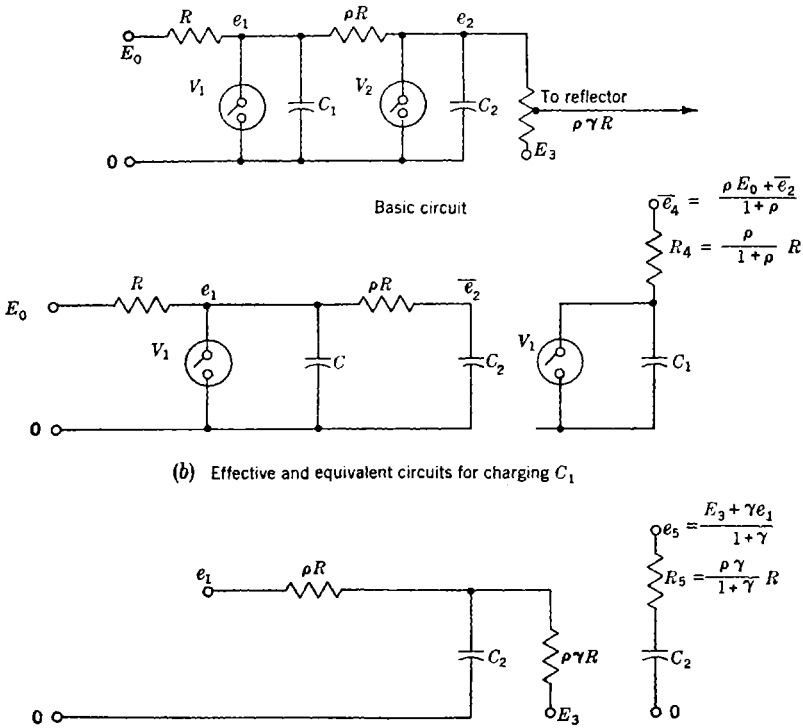

(b) Effective and equivalent circuits for charging C_1

(c) Effective and equivalent circuits for charging C_2

FIG. 7·20.—Equivalent circuits for gas-discharge-tube AFC.

N. Rochester[1] has developed a theory giving the precise behavior of gas-discharge-tube control circuits, from which the following rates and ripple may be derived. The only assumption involved is that the time constant for charging the sweep condenser C_2 is much larger than that for charging the search-stopping condenser C_1. This is always true in practice since the slow sweep must be such that several pulses appear during the transit of the receiver pass band, whereas the search stopper must be fully recovered within a few pulses.

[1] Sylvania Electric Products Co., Boston, Mass.

For the notation of this discussion, the reader is referred to Fig. 7·20. In this figure capital letters denote fixed quantities; lower-case letters, variable quantities. Average values are differentiated from instantaneous values by the presence of a superscribed bar. V_1 and V_2 are represented by switches which close only long enough to discharge their respective condensers. To simplify the calculations, all voltages are referred to the plate voltage of either tube when conducting (about 10 volts above the cathode potential). The resistance of the potentiometer from which E_3 is derived is neglected. One can allow for it by replacing it with an equivalent voltage and resistance, using Thévenin's theorem, and including the resistance in $\rho\gamma R$. In practice such a correction is small.

Because of the difference in time constants, e_2 may be considered constant during any one firing cycle of T_1. Hence e_1 may be computed as a function of time. When e_1 has been determined, the instantaneous current in ρR flowing into C_2 may be computed for one cycle. From this, the change in e_2 may be computed. Figure 7·20*b* shows the circuit for charging C_1 and the equivalent circuit derived from Thévenin's theorem. The charging voltage and resistance are

$$\overline{e_4} = \frac{\rho E_0 + \overline{e_2}}{1 + \rho}, \qquad R_4 = \frac{\rho}{1 + \rho} R. \tag{10}$$

When, after a trigger, the tube V_1 is momentarily made conducting, the voltage across C_1 will build up exponentially from zero, with a time constant R_4C_1, approaching $\overline{e_4}$. The equation is

$$e_1 = \overline{e_4}\,(1 - e^{-t/\mu\tau}), \tag{11}$$

where

$$\mu\tau = R_4C_1 = \frac{\rho}{1 + \rho} RC_1 \tag{12}$$

and τ is the interval between pulses.

When the AFC is in equilibrium, control pulses will be applied to the grid of T_1 at more or less regular intervals so spaced as to maintain the required value of $\overline{e_2}$. Let us assume this interval to be $n\tau$. Because of the linear relation between voltage and current, the average current flowing in ρR may be computed from the difference between the average voltage e_1 across C_1 and the voltage e_2:

$$\overline{e_1} = \frac{1}{n\tau}\int_0^{n\tau} e_1\,dt = \overline{e_4}\left[1 - \frac{\mu}{n}\left(1 - e^{-\frac{n}{\mu}}\right)\right] = F\left(\frac{\mu}{n}\right)\overline{e_4}. \tag{13}$$

A plot of $F(x)$ vs. x, where $x = \mu/n$, is shown in Fig. 7·21.

To compute the ripple, we observe that when $e_1 = \overline{e_1}$, the instantaneous current in ρR equals the average current so that the instantaneous slope de_2/dt is zero. This is the maximum excursion downward between triggers, and the time at which it occurs may be found by equating the right-hand sides of Eqs. (11) and (13), with the result

$$t_1 = \mu\tau \ln \frac{1}{1 - F}. \tag{14}$$

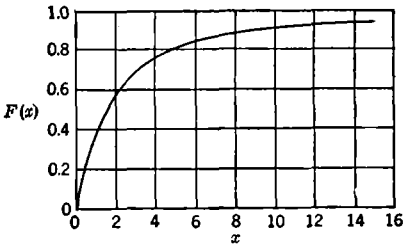

FIG. 7·21.—$F(x)$ vs. x.

We next note that, as shown in Fig. 7·20*c*, Thévenin's theorem can be applied to reduce the influences on the voltage across C_2 to that of a single variable voltage source e_5 with internal resistance R_5 where

$$e_5 = \frac{E_3 + \gamma e_1}{1 + \gamma}, \qquad R_5 = \frac{\rho\gamma}{1 + \gamma} R. \tag{15}$$

Now e_5 is made up of a steady component $\overline{e_2}$ and a ripple component e_2 We may obtain $\overline{e_2}$ by replacing e_1 by $\overline{e_1}$ in the first of Eqs. (15)

$$\overline{e_2} = \frac{E_3 + \gamma\overline{e_1}}{1 + \gamma}. \tag{16}$$

The ripple is then given by

$$\tilde{e}_2 = e_5 - \overline{e_2} = \frac{\gamma(e_1 - \overline{e_1})}{1 + \gamma}. \tag{17}$$

Taking e_1 and $\overline{e_1}$ from Eqs. (11) and (13), we obtain

$$\tilde{e}_2 = \frac{\gamma\overline{e_4}}{1 + \gamma}\left(1 - F - e^{-\frac{t}{\mu\tau}}\right). \tag{18}$$

The current flowing out of C_2 is

$$\tilde{i} = \frac{\tilde{e}_2}{R_5} = \frac{\overline{e_4}}{\rho R}\left(1 - F - e^{-\frac{t}{\mu\tau}}\right). \tag{19}$$

This may be integrated from zero to the time of the maximum excursion t_1, of Eq. (14), to give the flow of charge. Dividing by C_2 gives the *maximum excursion*, or *peak-to-peak ripple*, Δe_{2R}.

$$\Delta e_{2R} = \frac{\mu\tau\overline{e_4}}{\rho R e_2}\left[(1 - F)\ln\frac{1}{1 - F} - F\right]. \tag{20}$$

We may solve Eqs. (10), (13), and (16) for $\overline{e_2}$, eliminating $\overline{e_4}$. This gives

$$\overline{e_2} = \frac{\rho\gamma F E_0 + (1 + \rho)E_3}{(1 + \rho)(1 + \gamma) - \gamma F}. \tag{21}$$

The maximum down-pull rate occurs when T_1 is fired by every pulse. This is computed in the same way as the ripple except that the integration interval is simply τ. The result is

$$(\Delta e_2)_D = \frac{\overline{e_4}}{\rho R C_2}[(1 - F)\tau + \mu\tau(e^{-\frac{1}{\mu}} - 1)] = \frac{\tau\overline{e_4}}{\rho R C_2}[F_0 - F], \tag{22}$$

where

$$F_0 = F(\mu) = 1 - \mu(1 - e^{-\frac{1}{\mu}}).$$

The up-pull rate is simply the free charging rate of C_2. Again by Thévenin's theorem, we can combine the influences of E_0 and E_3 on C_2 into a single voltage E_6 acting through a resistance R_6. The circuit is similar to that shown in Fig. 7·20c except that e_1 is replaced by E_0, and ρR by $(1 + \rho)R$. Thus

$$E_6 = \frac{(1 + \rho)E_3 + \rho\gamma E_0}{1 + \rho + \rho\gamma}, \tag{23}$$

and

$$R_6 = \frac{\gamma\rho(1 + \rho)}{1 + \rho + \rho\gamma} R. \tag{24}$$

The current flowing into C_2 is

$$i = \frac{E_6 - e_2}{R_6},$$

giving rise to a voltage change per interpulse interval of

$$(\Delta e_2)_U = \frac{(1 + \rho)E_3 + \gamma\rho E_0 - (1 + \rho + \gamma\rho)e_2}{\gamma\rho(1 + \rho)RC_2}\tau. \tag{25}$$

These equations, although accurate, are inconvenient to use. A simpler form that is directly related to quantities easily measured in a practical circuit may be obtained as follows:

Set
$$\nu = \frac{RC_2}{\tau},$$
$$E_B = \overline{e_2}, \qquad \text{when } n = 1,$$
$$E_T = \overline{e_2}, \qquad \text{when } n = \infty.$$

After prolonged operation with no triggers, e_2 will equal E_T, and Δe_2 will be zero.

From Eq. (25), then,

$$(1 + \rho + \gamma\rho)E_T = (1 + \rho)E_3 + \gamma\rho E_0. \tag{26}$$

This may be substituted back into Eq. (25), giving

$$(\Delta e_2)_U = \frac{1 + \rho + \gamma\rho}{\nu\gamma\rho(1 + \rho)} (E_T - e_2). \tag{27}$$

From Eqs. (16) and (13)

$$F\overline{e_4} = \left(1 + \frac{1}{\gamma}\right) e_2 - \frac{1}{\gamma} E_3. \tag{28}$$

For $n = 1$, this becomes

$$F_0\overline{e_4} = \left(1 + \frac{1}{\gamma}\right) E_B - \frac{1}{\gamma} E_3. \tag{29}$$

These quantities may be substituted in Eq. (22) to give

$$(\Delta e_2)_D = \frac{\left(1 + \frac{1}{\gamma}\right)}{\nu\rho} (E_B - e_2). \tag{30}$$

No such simplification of the expressions for the ripple voltage is possible.

E_B and E_T may be measured with a vacuum-tube voltmeter at the plate of V_2 by the application of triggers to V_1 at the pulse recurrence frequency and by the removal of all triggers from V_1, respectively. They may also be computed from Eq. (21) by the substitution of F_0 and $F_\infty = 1$ respectively for F. These values depend on E_3, which is determined by the range-setting potentiometer.

The general principles that must guide the designer are fairly clear. The highest possible following rate consistent with allowable ripple should be sought. E_B and E_T should be well outside the control limits between which e_2 is to operate in order to provide residual following speed at the limits.

It appears that the choice of ρ is not critical. All values between $\frac{1}{2}$ and 2 will give substantially the same ratio between ripple and maximum down-pull rate. A large value of ρ tends to make the up-pull and down-pull time constants (*not* following rates) equal, and provides better filtering of the sawtooth voltage on C_1 by the ρRC_2 network. The extra filtering is precisely offset, however, by the reduced down-pull rate and meanwhile V_1 will become harder to extinguish. A similar effect is observed if ρ is made small. The compromise value $\rho = 1$ should be satisfactory in nearly every case.

The choice of C_1 should be such as to make $\overline{e_2}$ have its midrange value for $n \approx 3.5$. If n is much smaller, there will be inadequate control range for down-pull, whereas if it is larger, the ripple will become excessive at the upper end of the control range, for which n will become greater than 10. Equilibrium at different parts of the range will occur for values of n between 2 and 10, the range below 2 and above 10 being for extra following

rate at the ends of the range. At $n = 10$, the ripple will be almost exactly twice the maximum down-pull, and this will be the limiting factor in the choice of C_2. Ripple is normally limited to a peak-to-peak value of about one fourth of the receiver bandwidth to the half-power points.

The peak current allowable for tubes used for V_1 is usually 0.5 amp. This fact makes necessary the use of a limiting resistor of at least 600 ohms (for a 300-volt supply), or a limiting choke in series with C_1 and C_2. With such limiting, V_1 will not extinguish reliably if R_4, the parallel resistance of R and ρR, is less than about 500,000 ohms. The lowest value consistent with reliable performance should be used. A common value is $R = \rho R = 1$ megohm. The current through the bleeder $\rho\gamma R$ reduces E_T, particularly when E_3 is made large and negative. To reduce this effect, $\rho\gamma R$ should be as large as possible, consistent with the leakage and runaway[1] possibilities of the controlled reflector. Values in excess of 6 to 8 megohms are dangerous.

One serious problem faces the designer of a gas-discharge-tube control circuit. It is necessary to ensure proper operation with any tube fulfilling JAN-1A specifications. The specifications for a type 884 gas-discharge triode, for instance, are such that if the bias is set for nominal firing at, for example, +200 volts, various tubes may fire anywhere between 160 and 240 volts. Added to this variation is an uncertainty of at least ±10 per cent in the bias if 5 per cent resistors are used. The tube is required to fire at a plate voltage appreciably less than E_T for any setting of the range-set control. In a reasonable design, with a 300-volt supply, E_T must be as low as 250 volts when the control is at its most negative end.

On the other hand, the tube must be capable of covering the entire sweep demanded by the local-oscillator reflector. When the control is at its most positive end, the value of $\bar{e}_2$ at the positive end of the hunting sweep is fairly high. In fact it has not been found possible to find any set of constants that will ensure firing at the end of the sweep with the one setting and simultaneously ensure nonfiring within the control range at the other setting for all JAN-approved tubes. The addition of a bias adjustment for V_2 will cure this difficulty but no simple procedure exists for making such an adjustment in the field.

It may be pointed out here that the effects of tube variation may be greatly reduced by feeding back part of the d-c plate voltage to the control grid. The effect is similar to the use of inverse feedback with high-vacuum-tube amplifiers. If one plots a graph of the grid voltage at

[1] If the reflector of a reflex oscillator becomes positive, from an accidentally applied potential, it may draw sufficient current to heat up and emit electrons, and secondary electrons will be produced. In this event, if the external resistance in the reflector circuit is too high, the control of the reflector voltage may be lost.

which the tube will fire as a function of the plate voltage, it will be seen that a triode such as the 884 has a "gain" of about 10, in that if the plate potential is increased by 10 volts, the grid firing potential becomes more negative by 1 volt. The corresponding curve for a tetrode such as the 2050 shows a "gain" of around 200, the grid firing potential being almost independent of plate voltage. The feedback factor β is the ratio between R_1 and $R_1 + R_2$ in Fig. 7·22.

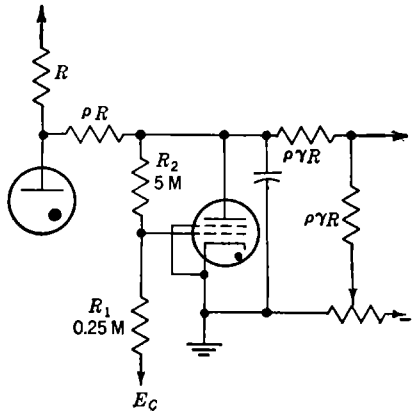

FIG. 7·22.—Inverse-feedback stabilization of V_2.

Using these definitions, the usual equations for feedback apply. The effective "gain" is given by

$$G = \frac{A}{1 - A\beta} \tag{31}$$

and the improvement by

$$\text{(Firing-voltage variability with feedback)} = \frac{\text{(Firing-voltage variability without feedback)}}{1 - A\beta} \tag{32}$$

Using the constants shown in Fig. 7·22, and taking $A = 200$, we find that $G = 19$, and the variability reduction factor is 1/12.5. It should be noted that a fairly large negative supply is required. If the feedback is achieved through the use of a cathode-biasing resistor, the control range is reduced by the reduction in available cathode-to-plate supply voltage. Also, the feedback loop draws current and reduces E_T in the same way as did $\rho\gamma R$ for negative settings of the range-set control. Much of the benefit of such stabilization is thus offset.

It will also be noted that there is considerable variation (up to 3 to 1) in the maximum up-pull and down-pull rates, depending on the position of the range-set control and the position in the sweep, because of the

exponential nature of the C_2 charging curve. Since the conditions which limit following rate apply to the maximum case, the following rate is unpleasantly low in the minimum case. Many of these difficulties are reduced to tolerable proportions if the supply voltage is increased. Thus, the circuits may be suspended between the −300-volt and the +105-volt supplies. This results in considerable improvement.

Some workers claim that gas-discharge tubes are not sufficiently reliable for these applications. One claim is that the firing conditions are affected by past history, age, and temperature. Another claim is that, in those circuits where the entire control unit is required to operate at the −2000-volt level, the tubes are subject to erratic firing caused by electrostatic influences. Neither of these claims has been conclusively verified, but both add weight to the argument that only high-vacuum tubes should be used in the control circuit. The following sections deal with a circuit that contains only hard tubes and is therefore free from the above objections, including the one resulting from nonlinear sweep rates.

7·13. Diode-transitron Control Circuits.—The new hard-tube control circuit is shown in Fig. 7·23. The block diagram of Fig. 7·16 is still

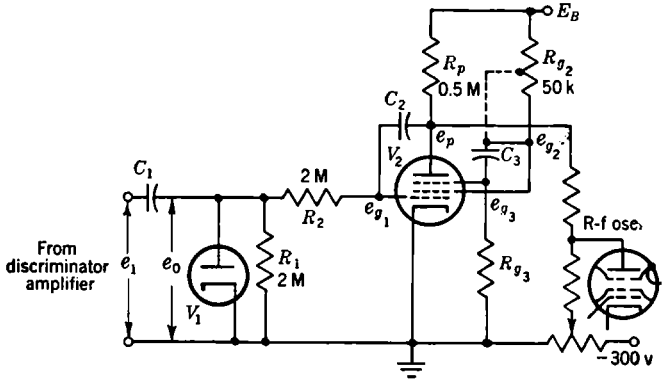

FIG. 7·23.—Diode-transitron control circuit.

applicable, the diode detector V_1 serving as search stopper, and the transitron oscillator V_2 as the slow-sweep generator. The transitron oscillator is a modification of a precision ranging circuit used extensively in radar indicators (Vol. 22). Its operation, which will be explained in detail below, depends essentially on the negative transconductance which exists between the suppressor grid G_3 and the screen grid G_2 of a pentode. As used in the control circuit, it is a free-running sawtooth oscillator whose plate voltage sweeps slowly from just below the plate supply voltage to a point not far from the cathode voltage, after which

it snaps back rapidly, and starts the downsweep again. The downsweep part of the cycle is used as the hunting sweep. Thus the local-oscillator frequency sweeps from low to high frequency, whereas, when the gas-discharge-tube circuit is used, it sweeps from high to low.

If, during the downsweep, the grid-return resistor is tied to a point suitably negative with respect to the cathode, the sweep action will stop, and the tube will act as a normal d-c amplifier with a gain of approximately 50. Such a negative bias, supplied by the diode detector when it receives control information from the discriminator, is the basis of locking.

Let us consider the sequence of events which takes place in this circuit, starting at the beginning of a downsweep. Assume, for the sake of argument, a plate supply of +150 volts measured from the cathode potential. The plate voltage e_p is about +140 volts, the plate current i_p being therefore 20 μa. G_3 will be at ground or positive potential (see below, also Fig. 7·24). As the division of the cathode current between plate and screen is normally in the ratio of about 4 to 1, the screen current i_{g_2} is 5 μa, causing a drop in the screen resistor of only 0.25 volt. Since the cathode current i_c is only 25 μa, the control grid G_1 must be nearly at cutoff potential, about −10 volts. At the beginning of the downsweep, the local oscillator is far off tune, and no control information appears at the output terminals of the discriminator amplifier. C_1, being small, plays no part at this time, nor does the diode, since its plate will be at −5 volts because of the division between R_1 and R_2. Because of the 10-volt drop, a current of 5 μa flows along R_1 and R_2 into the condenser C_2. Consequently, the voltage across C_2, which is $(e_{g_1} - e_p)$, changes at a rate

$$\frac{d}{dt}(e_{g_1} - e_p) = \frac{e_{g_1}}{(R_1 + R_2)C_2}. \tag{33}$$

The grid voltage does not approach ground potential at this rate, for, as it rises, the plate voltage is approaching ground A times as fast, where A is the gain of the stage. Thus

$$\frac{de_p}{dt} = -A\frac{de_{g_1}}{dt}. \tag{34}$$

Substituting in Eq. (33), we have

$$\frac{de_{g_1}}{dt} = \frac{e_{g_1}}{(R_1 + R_2)(1 + A)C_2}. \tag{35}$$

There is, therefore, an apparent input capacitance $(1 + A)$ times as great as the actual feedback capacitance C_2. This capacitance ampli-

fication makes possible very slow sweeps with small condensers. It is a manifestation of the well-known Miller effect.[1]

The downward rate of change of the plate voltage is

$$\frac{de_p}{dt} = \frac{e_{g_1}}{(R_1 + R_2)} \frac{A}{(1 + A)C_2} \approx \frac{e_{g_1}}{(R_1 + R_2)C_2} \tag{36}$$

since $A >> 1$. The sweep rate is nearly independent of tube characteristics. In practice, e_{g_1} swings from about -10 to -8 volts as the plate covers its sweep. The sweep is therefore linear to within about ± 10 per cent, a great improvement over the gas-discharge-tube circuit (Sec. 7·12).

This then is the picture that we see during the downsweep, up to the time the discriminator crossover frequency is reached. As soon as the crossover frequency is passed, positive pulses appear at the plate of the discriminator amplifier and are coupled through C_1 into the diode detector.

The action of the detector is straightforward. During the positive pulse the diode is conducting, and charge flows into C_1. When the pulse is removed this charge remains, and the potential across the diode becomes negative. After a few pulses the average potential across the diode is sufficiently negative so that the charge leaking off C_1 through R_1 between pulses equals the charge transferred to C_1 by the pulses. The system will reach a stable equilibrium in which the oscillator rides far enough up on the discriminator characteristic to supply pulses whose amplitude is just right to maintain the bias which holds the transitron, and thus the reflector, at the correct voltage. If the oscillator frequency were to increase, the pulse amplitude would increase, causing an increase in bias and hence of transitron plate voltage. This would cause the oscillator frequency to decrease again. Lowering the oscillator frequency would be compensated for in a similar way.

To complete the picture, we have only to show how the system is recycled if no control information is received during the sweep or if the system becomes unlocked. The effects are illustrated in Fig. 7·24, with reference to the circuit of Fig. 7·23. When control information is lost, the charge on C_1 quickly disappears, so that the downward sweep of the plate is resumed. This is illustrated in region A.

At first, the voltage drop across the screen-supply resistor R_{g_2} is negligible both because most of the cathode current reaches the plate and because of the low value of R_{g_2}. As the plate potential approaches ground, however, an increasing fraction of the increasing cathode current

[1] J. M. Miller, "Dependence of the Input Impedance of a Three-electrode Vacuum Tube Upon the Load in the Plate Circuit," Bureau of Standards Scientific Paper No. 351, Terman, *op. cit.*, Sec. 5, p. 468.

is diverted to the screen G_2 whose potential therefore starts to fall. Because of the condenser C_3, this fall is coupled over to the suppressor G_3. Soon, the process becomes regenerative, at B. As the suppressor voltage e_{g_3} is carried below ground potential, it diverts current from plate to screen, causing e_p to rise and e_{g_2} to fall farther. The rise in e_p is coupled through C_2 to G_1, causing an increase in cathode current most of which

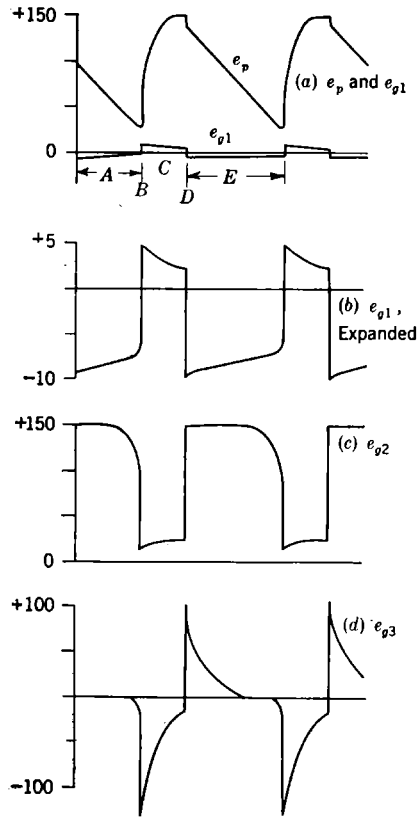

FIG. 7·24.—Transitron waveforms.

now flows to the screen, further accelerating the process described above. Since this process involves no change in the charges on C_2 and C_3, only interelectrode and stray capacitances slow it down. The entire transition actually takes place in a few microseconds.

When e_{g_1} has been carried by the plate to a slightly positive voltage, grid current will be drawn, preventing further rise. At this instant the cathode current is large, and all of it flows to the screen, the plate being

cut off by the suppressor. Consequently, e_{g_2} is close to ground potential, e_{g_3} is far below ground potential, and e_p is perhaps 15 volts above its value at the end of the slow downsweep.

During the next period (region C of Fig. 7·24) C_2 is charged, with a time constant R_pC_2, toward E_B. Meanwhile, the charge on C_3 leaks off through R_{g_3}, so that e_{g_3} approaches ground potential with a time constant $R_{g_3}C_3$. Presently, e_{g_3} comes close enough to ground potential to allow some of the current to reach the plate, which by this time is practically at E_B. This flow of plate current, by causing e_p to drop, starts the second regeneration at D, in the following manner.

The downward trend of P, being transmitted by C_2 to G_1 causes a reduction in the cathode current, and hence in the screen current. The resultant rise in e_{g_2}, because of C_3, causes a similar rise in e_{g_3}, which in turn allows more current to reach the plate. Thus, the original effect is accelerated both by the increased drop in e_p and by the decreased screen current. Again there is a fast transition, which stops only when e_{g_1} has been carried so far negative that only a little cathode current flows, an amount consistent with the plate current flow necessary to maintain e_p some 10 volts below E_B. At this point the slow sweep downward repeats, starting the new cycle. This sawtooth sweep, then, will recur until control is again secured.

Before the idea of the diode search stopper was conceived, a circuit was developed using a gas-discharge tetrode search stopper, as in the standard gas-discharge-tube AFC, and a transitron control tube. Essentially, the plate of V_1 of Fig. 7·18 was attached to a potential divider whose lower end was at -300 volts, and the divider tap was connected through a resistor to the control grid of the transitron.

A new type of miniature tube, the 6AS6, was developed for use in transitron ranging circuits. In that application, a sharp cutoff of plate current by the suppressor was desired. When this tube was tried in the circuit described above, it was found that the regeneration at the end of the downsweep occurred while the plate was still far above ground potential. In order to prevent this, the circuit was modified by coupling only about one sixth of the screen wave to the suppressor by tying the coupling condenser C_3 of Fig. 7·23 to a tap on the screen-dropping resistor R_{g_2}. The change is shown by dotted lines.

An examination of the diode-transitron circuit shows a number of advantages some of which, such as linearity of sweep and the obtaining of long sweep times with relatively small condensers, have already been cited. Others include the possibility of using a high-voltage condenser between the video amplifier and the diode, enabling the circuit to operate at a voltage far from ground potential. A further increase in sweep time may be obtained by the use of high resistances in the grid circuit;

this is not possible when the charging resistance is in the plate circuit. Since the output voltage is taken from the plate at relatively low impedance, it is possible to apply voltage to the reflector from a divider of lower impedance than that used in the gas-discharge-tube circuit, without having the sweep seriously affected by the range-set control. By proper choice of constants, the range covered by the sweep may be made nearly independent of tube selection and resistor tolerances. One final point to be noted in connection with reflector circuits is that the control tubes are often connected between the negative power supply and ground, since the reflector voltage is usually below ground.

THERMAL HUNTING SYSTEMS

7·14. Background and Basic Theory.—When the thermally tuned tubes, the 2K45 and the 2K50, became available, it was necessary to develop new circuits for controlling their frequency. One of the normal drift-in systems (Sec. 7·10) could be used by connecting the output of the control tube to the grid of the tuner triode through a suitable potential divider. If a system of this kind were used, however, the sweep period would have to be made long compared with the time constant of the thermal assembly in order to avoid hunting or even oscillation over the feedback loop. For instance, when such a system was applied to the A5022A,[1] the complete hunting cycle had to be set at 90 sec. Furthermore, because of the wide tuning ranges involved, locking to the wrong sideband (Sec. 7·9) became a serious problem.

Circuits were therefore devised in which the tuner power is either fully on or fully off, so that hunting and following speeds are limited only by the thermal inertia of the tuning strut. In some of the circuits, the wrong sideband is inherently rejected; in others, it is arranged so that there is no wrong sideband—that is, these systems will lock on frequency on either sideband. In the present state of the art, these circuits represent a considerable increase in complexity; control circuits with four to seven tubes must be used to replace the two-tube drift-in circuits. There are compensating advantages, however. Foremost is the fact that fully automatic following of a tunable magnetron over a wide range becomes possible. This fact may be of primary importance in enabling the operator of a radar set to escape from jamming, either by the enemy or accidentally by friendly systems. In peacetime applications this property may be less important.

A second point is that, with the advent of the balanced mixer (Chap. 6), local-oscillator noise in the receiver has been practically eliminated, and

[1] The A5022A was an early 1-cm oscillator which did not have a tuning triode; however, the external power supply used for heating the tuning mechanism was grid-controlled.

the major reason for the use of high intermediate frequencies with the poor receiver noise figures which they entail is thereby removed. The trend is toward the use of a 30-Mc/sec intermediate frequency for which the sidebands are only 60 Mc/sec apart. When a 60-Mc/sec receiver is used, the local oscillator stops oscillating before it reaches the wrong sideband. At 30 Mc/sec, this is not true, and locking on the wrong sideband is a problem even with the limited tuning range afforded by the reflector.

A final point is that, at least in the mechanically tuned 25,000-Mc/sec 2K33 oscillator, a large ungainly tuning mechanism is required. Also, the temperature drifts to be expected are so great that a remotely con-

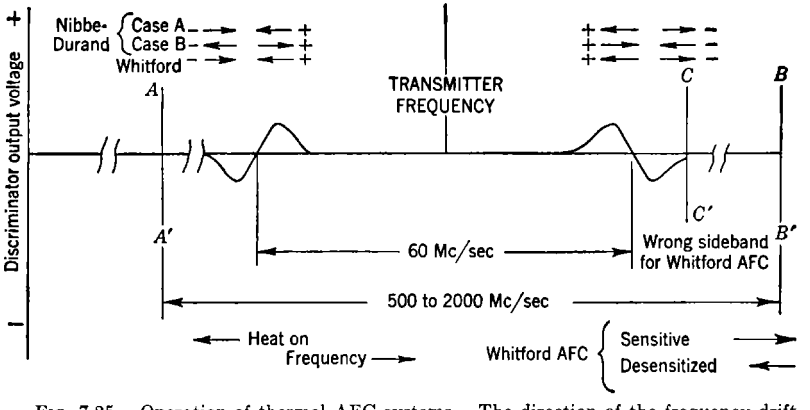

FIG. 7·25.—Operation of thermal AFC systems. The direction of the frequency drift after a pulse of a given polarity is given at the top of the figure for the various cases. Note the possibility in the Whitford system of being trapped between the negative trigger wall at C-C' and the search-reversing point B-B'. In the Nibbe-Durand AFC, Case A represents the condition existing after a heat-control reversal at A-A'; Case B, that existing after a reversal at B-B'.

trolled tuning motor is required to enable the operator to select the operating range for the AFC. This motor adds considerably to the weight and volume of the local oscillator.

In spite of their complexity, the circuits about to be described are reliable, and are not critically dependent on tube selection or component tolerance for satisfactory operation. In view of the advantages cited, therefore, their use is justified for some applications.

The "on-off" feature described at the beginning of the section makes possible reasonable following rates. This feature is combined with push-pull operation to obtain locking and wrong-sideband rejection. In the Whitford AFC system, the operation (see Fig. 7·25) is the following. If the circuit is arranged in such a way that positive triggers from the discriminator turn the strut power on, causing the oscillator

frequency to decrease (move to the left) and negative triggers turn it off, causing the frequency to increase (move to the right), then it is possible to lock on frequency at the left-hand sideband, and locking at the other sideband is excluded. If, furthermore, provision is made for causing this cycle to repeat once every few seconds when the system is not locked, the frequency will hunt back and forth over a band whose limits are shown at A-A' and B-B' in the figure, until the desired locking frequency is reached. The AFC system as described can be trapped between the right-hand end of the sweep B-B' and the negative "trigger wall" C-C' at the high-frequency side of the right-hand sideband. This trapping is overcome by desensitizing the video amplifier during the heating part of the hunting cycle so that the frequency has to sweep all of the way to the left and start back before any pulses can come through. In the Nibbe-Durand system described in Sec. 7·16, a form of "lazy man" reversing switch is used, which, in essence, inverts the relation between trigger polarity and the tuning-strut-heater control in such a way as to make it correct for locking to the first sideband encountered during hunting. The next two sections treat in detail the circuits actually used.

7·15. The Whitford AFC.—A block diagram of the control circuit is shown in Fig. 7·26 and a circuit diagram in Fig. 7·27. The balance of the

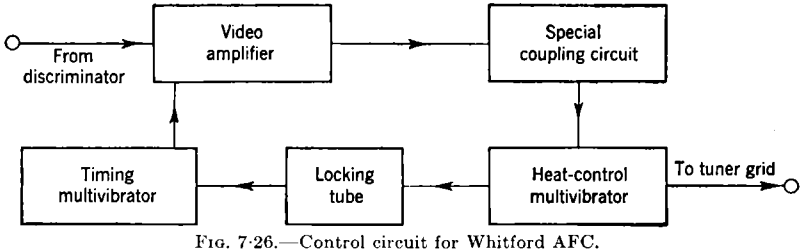

FIG. 7·26.—Control circuit for Whitford AFC.

feedback loop is similar to those already discussed in Secs. 7·4 to 7·8 and shown in Fig. 7·2. The only difference is that the discriminator must be designed to produce a pulse with a short rise time (Secs. 7·7 and 7·8); stretching the pulse is unnecessary.

The circuit operates in the following manner. The power in the tuning strut of the local oscillator is controlled by a reversing multivibrator, or Eccles-Jordan "trigger" circuit (V_4 in Fig. 7·27). This circuit has two stable conditions of equilibrium. In the first condition, the left-hand section, V_{4b}, is conducting heavily, with its grid potential at the grid-current point, while the other section, V_{4a}, is completely cut off. The plate potential of section a is therefore close to $B+$, and the tuner triode grid is close to ground potential. Strut power is therefore high, and local-oscillator frequency low or falling. In the other position,

V_{4b} is cut off and V_{4a} conducts. The plate of section a is now close to cathode potential, the tuner grid is negative, strut power off, and frequency high or rising.

Hunting is accomplished by switching V_4 alternately between these positions at intervals somewhat longer than the thermal time constant of the local oscillator (from 2 to 10 sec). Locking is accomplished by

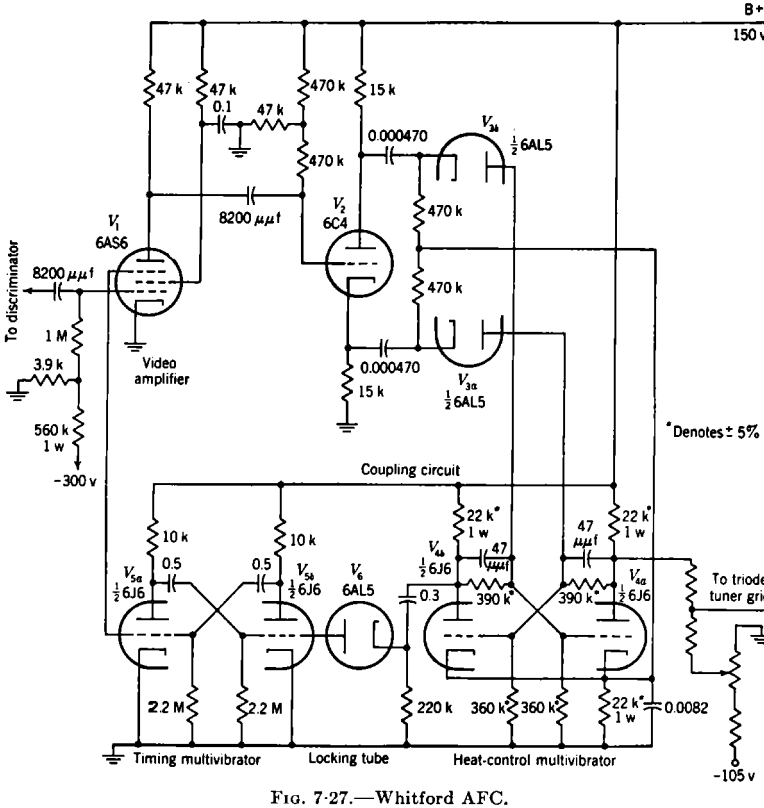

FIG. 7·27.—Whitford AFC.

switching at a rate so high (50 to 200 per sec) that thermal inertia keeps the strut temperature substantially constant. The average temperature is determined by the ratio of the time spent at full power to that spent at zero power.

It was shown in the previous section that a one-to-one relation between trigger polarity and the application or removal of strut power was sufficient to provide locking of one sideband and rejection of the other. A simple capacitance coupling between the video-amplifier plate

and the grid of V_{4a} produces such a relation, but it is unreliable. A small negative pulse is capable of turning an "on-tube" off, but a large positive pulse is required to turn an "off-tube" on. This is because the grid of an on-tube is held, by grid current, close to cathode potential where the mutual conductance g_m is high, whereas, to provide an adequate margin of safety against tube variations, the grid of an off-tube must be held far below the point of complete plate-current cutoff. The serious effect of such asymmetry is that if the gain of the system is adequate to ensure operation on the positive pulses of the fundamental sideband, it may allow operation on transients or on the negative pulses of a harmonic sideband (see Sec. 7·5).

Complete symmetry is assured by using a phase inverter (V_2) and applying the two equal but opposite output voltages to the two grids of V_4. Thus, positive pulses at the plate of V_1 result in negative pulses at the plate of V_2, which will turn V_{4b} off if it is o . Similarly, negative pulses at V_1 produce negative pulses at the cathode of V_2, which can turn V_{4a} off.

In principle, the positive pulses appearing at the plate or cathode of V_2 might be used to aid the negative pulses on the opposite electrode. If such aid is permitted however, another ill effect causing unreliability may occur. Suppose two positive pulses appear in sequence at the plate of V_1. The first produces a negative pulse on the grid of V_{4b}, which is therefore turned off. The second produces, in addition, a positive pulse which would reach the grid of V_{4a} if it were not for the diode V_{3a}. Since V_{4a} is now conducting, with its grid drawing current and acting as a diode, this positive pulse would charge the coupling condenser. When the cathode end of this condenser returned to its quiescent voltage, the grid end would become negative. This overshoot, caused by differentiation of the pulse, would be quite capable of turning V_{4a} off again and producing an undesired reversal of the heat-control circuit. Adding the diodes of V_3 is a complete cure for this trouble. This special coupling circuit gives satisfactory operation independent of tube selection and component tolerance. Returning to the main argument, then, we see that V_1 through V_4 provide precisely the type of coupling between discriminator output voltage and thermal triode power that was specified in Sec. 7·14.

Hunting and the desensitizing discussed in the previous section are accomplished by means of a slow timing multivibrator V_5. The cycle of the grid potential of a multivibrator is such that during one phase the grid is very close to ground potential, whereas during the other phase it is negative and rising. One of the grids of V_5 is tied directly to the suppressor grid of the video amplifier V_1. When these grids are close to ground potential, V_1 acts as a normal amplifier. When they are negative,

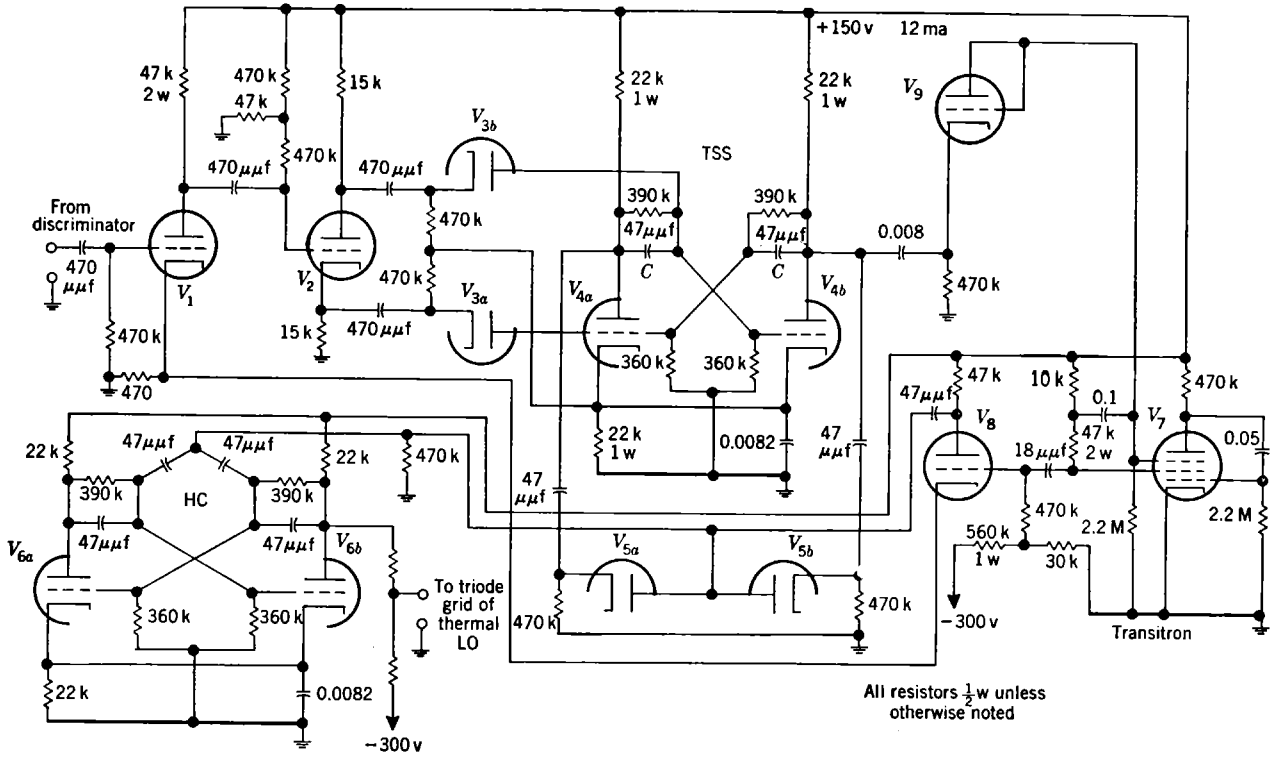

FIG. 7·28.—Nibbe-Durand thermal . FC.

however, the plate current in V_1 is completely cut off, providing the required desensitizing. Furthermore, the transition between the two conditions produces a sharp voltage rise at the plate of V_1 when this tube is cut off. This abrupt voltage change is differentiated in the coupling condenser, proceeds through V_2 and V_3, and acts as a trigger to cut V_{4b} off. The multivibrator that governs strut power is thus reversed, and the desensitized recovery sweep of the local oscillator is started. Similarly, when the multivibrator switches to the other phase, turning V_1 on again, the negative wavefront thus produced turns V_{4b} on again, and institutes the active hunting sweep.

The only problem remaining is to stop the action of the multivibrator when the system is locked. For this purpose, the audio-frequency square wave at one of the plates of the heat-control multivibrator is differentiated and rectified by V_6. The negative voltage thus produced is applied to the grid of V_{5b}, effectively holding the multivibrator fixed.

7·16. Nibbe-Durand AFC System.—This system, shown in Fig. 7·28 is arranged to lock on whichever sideband is first encountered after the heat-control reversal marking the end of a hunting sweep. Both directions of the sweep are active, and the video amplifier is always sensitive. The heart of the system is a pair of reversing-multivibrator circuits similar to that used in the Whitford system described in the previous section. The coupling into the first circuit and the coupling out of the second are respectively identical to the input and output couplings of the reversing-multivibrator circuit in the Whitford AFC. In addition, there is a coupling between the two multivibrators such that whenever the first one reverses, the second will likewise reverse. Thus, with a given phase relationship between the two, the system can lock on one sideband just as it does in the system previously discussed. The triggered reversals of the first trigger-sign selector, or TSS, circuit are transmitted to the second heat-control, or HC, circuit. If the relative phases are changed, the system will lock in a similar manner on the other sideband. This is illustrated in Fig. 7·25.

A transitron oscillator V_7 that has a period of one to two times the time constant of the thermal assembly of the local oscillator to be controlled is provided (see Sec. 7·13). The transitron generates triggers which operate the TSS and HC circuits. The triggers are obtained by differentiating the voltage wave at the screen grid (see Fig. 7·24*c*). The differential output waveform consists of a sharp negative trigger followed by a sharp positive trigger. These triggers are introduced to the grid of a triode V_8 that is biased beyond cutoff. The negative trigger therefore has no effect, but a positive trigger brings the grid into the conducting region and results in a small positive trigger at the cathode and a large negative trigger at the plate. Because of a connection from

the cathode of this tube to the cathode of the video amplifier V_1, the small negative trigger is applied to the signal channel leading to the TSS. It is equivalent to a negative trigger at the grid of V_1 and therefore *presets* the TSS in such a way as to make it ready to accept only positive triggers from the discriminator.

Simultaneously, the negative trigger at the plate of V_8 is coupled through small condensers to the grids of the HC and cuts off whichever section of the HC is conducting at the time. The heat control in the tuner triode is reversed and a reverse sweep is started.

To restate, in the absence of control information from the discriminator, the oscillator frequency is swept up and down over the band, the reversals occurring at each cycle of the transitron. At each reversal, provision is made to ensure that the TSS is ready to accept positive triggers from the discriminator. Examination of Fig. 7·25 shows that, after each HC reversal, the first discriminator triggers that are capable of causing a TSS reversal, and hence a locking reversal of the local oscillator, come only after the crossover frequency has been passed. Consequently, if control information appears, the frequency will pass crossover, and then the drift will be reversed. When the crossover frequency is again passed, the negative triggers from the discriminator will cause a second reversal of frequency drift, and so on. The system will be locked.

If the transitron were allowed to continue operation, there would be an even chance that a given reversing trigger would disturb the phase relation between the TSS and the HC, making a shift to the other sideband necessary. For, although every trigger would cause a reversal of the HC, reversal of the TSS would occur only if it happened to be prepared to receive negative triggers at the time, which would be true on the average only half of the time.

Therefore, the transitron trigger generator must be stopped. This is accomplished by a detector, V_9, whose input voltage is the differentiated waveform at one plate of one of the reversing multivibrators. The pulses that appear every few seconds from the hunting-cycle reversals are too infrequent to generate appreciable voltage, but when the system is locked, pulses appear at an audio frequency, and V_9 develops a large negative bias. This bias is applied to the suppressor grid G_3 of the transitron. Since the bias does not affect phases A, B, and C of Fig. 7·24, after due time the transitron screen voltage suffers its abrupt drop. It does, however, prevent the completion of phase D of the wave on G_3 (Fig. 7·24*g*), with the result that the plate remains completely cut off and the transitron cycle is stopped.

Application of the stopping bias voltage in this manner permits a valuable "second chance" feature. The time required for the voltage

to leak off, should the system become unlocked, is set to be somewhat greater than the time required for the frequency to sweep from one sideband to the other and back (about $\frac{1}{2}$ sec in a typical case). Suppose that, because of transmitter sparking, for example, the discriminator output signal disappears long enough to allow the system to become unlocked. If, at that time, the oscillator frequency is approaching the transmitter frequency, it will drift over to the other sideband, where a pulse will appear that sends it back to its original position. The bias voltage will have held the transitron off long enough to allow this to happen and locking will be restored. If triggers have not been restored when the other sideband is reached, the frequency will continue to charge for a short time, at the end of which the bias voltage will leak off, the transitron will begin to oscillate, and the drift will be reversed by the first trigger. The system now will lock on the other sideband. If the oscillator frequency were moving away from the transmitter frequency at the time of the original unlocking, it would simply continue until the release of the trigger generator, at which time it would reverse its direction of frequency change, move back, and lock to the original sideband.

In a typical case, the interval between unlocking and the second-chance trigger is about $\frac{1}{2}$ sec. Locking is therefore resumed within a second. This speed of locking represents a great improvement over the Whitford AFC in which, with equal probability, locking may be restored quickly by the pulse from the other sideband, or a complete recycling, which may take two full transitron periods (20 sec, in some cases) may be required.

It may seem that fairly complex methods have been adopted to secure simple ends. When the circuit was originally conceived, V_2, V_3, V_5, and V_8 were not included, yet locking was obtained. The system was unreliable, however; to provide positive action, all of the above tubes are required. The necessity for the phase inverter V_2 and the dual diode V_3 has already been discussed in connection with the Whitford circuit (Sec. 7·15). The identical problem exists here.

Originally, the coupling to the HC was taken from a single plate of the TSS. The negative wavefront of one reversal turned the on-tube off, and the positive one from the other reversal turned the off-tube on. This arrangement worked satisfactorily except for the special case where the input pulse to the TSS was slightly below the voltage necessary to produce a reversal. With such a trigger, the plate voltage of the on-tube of the TSS would rise part of the way, reversing the HC, and then fall again, leaving the TSS unreversed and destroying the correct phase relation. Under these conditions, the plate potential of the TSS off-tube remained fixed. The slightest lowering of this voltage sufficed to ensure TSS reversal. Therefore, the negative triggers from both plates were coupled

to the HC, and the diodes V_5 were added to decouple the plates from each other and to eliminate the effects of the positive wavefronts.

The main purpose of the tube V_8 was to make possible the use of the positive portion of the transitron screen wave, which provides the second-chance feature, and at the same time to utilize the sensitivity of the reversing multivibrators to negative triggers. Coupling without the tube V_8 was unreliable and used the negative part of the screen wave. Most of the difficulties resulted from spurious reversal from overshoot on the positive part of the wave and from the loading of the HC by the coupling circuit, which made reversal of the HC by the TSS difficult.

One further point should be noted. In the first model of the final circuit the two sections of a 6J6 twin triode were used for V_1 and V_8, which have a common cathode connection. No troubles were encountered. In a second model, similarly constructed, it was found that the TSS reversed on the negative trigger from the transitron screen. This caused a reversal of the HC when, shortly, the positive trigger came along; the TSS was preset properly, but the HC was reversed a second time, leaving no net reversal for the hunting sweep. The trouble was traced to the capacitive coupling between the grids of the two sections. The sharp negative dip in the grid of V_8 produced a similar, smaller dip in that of V_1. The use of separate tubes, of course, solved the problem. Other solutions may be possible. For instance, if the wavefronts were slowed down by an RC circuit, a combination might be found which would be slow enough to reduce the capacitance coupling to a negligible value, yet fast enough to ensure the desired triggering.

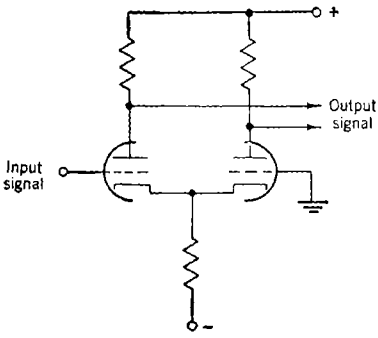

FIG. 7·29.—Phase inverter with amplifications.

Other reductions of circuit complexity may be possible. One tube can clearly be eliminated by the use of a combination phase inverter and amplifier: the so-called "cathode-coupled push-pull amplifier" used in the Dumont Model 208 oscilloscope. A circuit for this device is shown in Fig. 7·29.

Since overshoot is caused by differentiation of the pulse, it may be that it could be reduced below the danger point by "stretching" the pulse from the discriminator (see Sec. 7·7) and making the negative slope at the end of the pulse small. The elimination of V_3 might thereby be possible. If the capacitance of the cross-coupling condenser C (Fig. 7·28) of the TSS were increased (which would pose new problems in the

triggering of the TSS), the wave at one of the plates would have the form shown in Fig. 7·30*a*. The downward trend of the plate voltage is inhibited only by interelectrode and stray capacitances. The voltage rise is likewise fast until the grid of the opposite section begins to draw current. After that, it is slow, as the plate load resistor charges the cross-coupling condenser. If this waveform were differentiated by an RC circuit of very short time constant, the pulses of Fig. 7·30*b* would appear. The sum of these pulses would be a smaller negative pulse which might be adequate to reverse the TSS, eliminating the need for V_5. It is doubtful if the phase inversion can be eliminated.

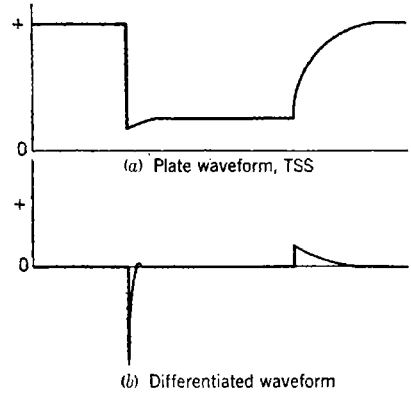

FIG. 7·30.—Effect of waveform on overshoot.

The circuit in its present form is fairly reliable. It will operate with any tubes meeting JAN-1A specifications and with any resistors or condensers within ±10 per cent of design value, including the most unfavorable combinations, with the exception that the resistors in the reversing multivibrator circuit should be ±5 per cent if limit tubes are to be used.

ABSOLUTE-FREQUENCY HUNTING SYSTEMS

7·17. The Beacon Problem.—The nature of absolute-frequency, A-F, AFC systems and their application to the radar-beacon problem were briefly considered in Sec. 7·3. Beacons are treated extensively elsewhere in this series,[1] but a brief review of their operation will be given here.

A radar beacon is a device which enables a radar operator to determine the range and bearing of the point at which the beacon transponder is located. When the operator throws the switch to BEACON, the length of the transmitter pulse is changed to a value that will allow the pulse to pass through the beacon receiver and operate the coding circuits. As a result, the beacon transmitter issues a series of coded pulses which identify it from other beacons, and the first of which appears on the radar indicator at a position that shows the range and bearing of the beacon.

If beacon signals were received continuously, one of the AFC systems described in the previous section could hunt for and lock to the signals. But because of antenna scanning, only a few sets of pulses are received

[1] Volume 3, Radiation Laboratory Series.

at each rotation. Therefore, the beacon receiver must be in tune when the first beacon pulse is received.

The problem of manually tuning a receiver to a beacon, with no reference frequency available to the operator, is almost insuperable, since the receiver must be in tune at the instant at which the antenna points to the beacon. Either a manual tuning aid or AFC is highly desirable. Either requires that the beacon transmitter frequency be known to the operator. Therefore, all beacons for a given class of service operate at a single fixed frequency.

The manual tuning aid consists of a precision reference cavity whose response peak differs from the transmitter frequency by an amount equal to the center frequency of the i-f amplifier. Power from the local oscillator is applied through the cavity to a crystal, the current from which is read on a milliammeter. The operator tunes the local oscillator until he gets an indication on the meter, at which time his receiver is in tune.

If AFC is used, the same type of reference cavity and crystal are used. The r-f problems associated with the cavity have been discussed in Chap. 4, and the circuits for control will be treated in the rest of this chapter. Most of the control circuits for beacon AFC have had provision for hunting (Sec. 7·3). These will be described in Secs. 7·18 and 7·19. A nonhunting d-c amplifier system operating with a *microwave discriminator* and capable of very precise control is discussed in Vol. 11 Chap. 2, of this series.

A tunable wavemeter cavity may be used in any of these systems to provide a stable tunable receiver with a precise calibration. Such a combination would be useful for multichannel communication.

7·18. Reflector-modulation Schemes for Reflector AFC.—These systems employ the drift-in control circuits described in Secs. 7·10 to 7·12. The problem is to convert information coming from the beacon AFC crystal to a voltage capable of operating the search stopper. The block diagram of Fig. 7·31 shows the method used when a diode transitron (see Sec. 7·13) is used. When a standard gas-discharge-tube control circuit (see Sec. 7·11) is desired, the coincidence tube itself is the search-stopping tube, the rest of the circuit being as in Fig. 7·18.

The nature of this circuit is such that when the local-oscillator frequency is on one side of the cavity resonance peak, the gas-discharge tube will not fire, but after the peak is passed (analogous to passing the crossover frequency), the tube starts to fire 1000 times per second. But this is precisely what happens when a conventional discriminator is used. On one side of the crossover frequency, the negative signal from the discriminator amplifier is ignored; on the other side, the positive signal triggers a gas-discharge tube or operates a diode detector as the case may be.

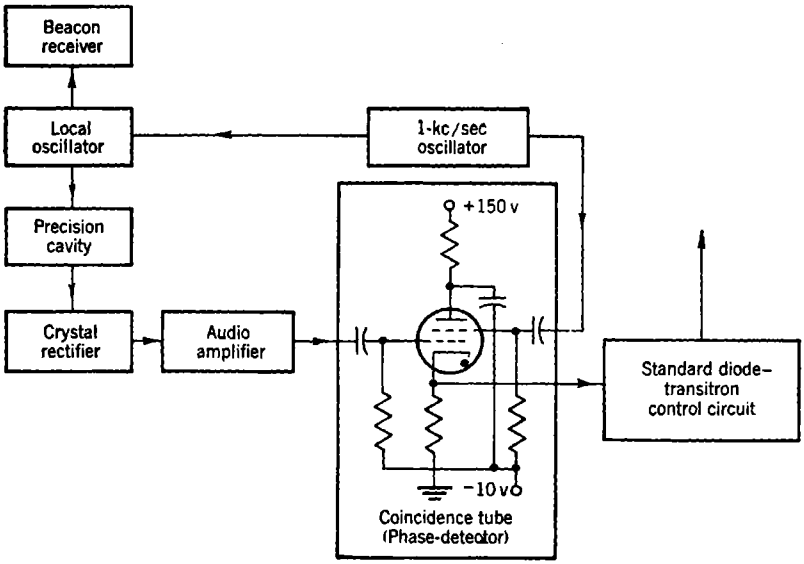

FIG. 7·31.—Reflector-modulation diode-transitron AFC.

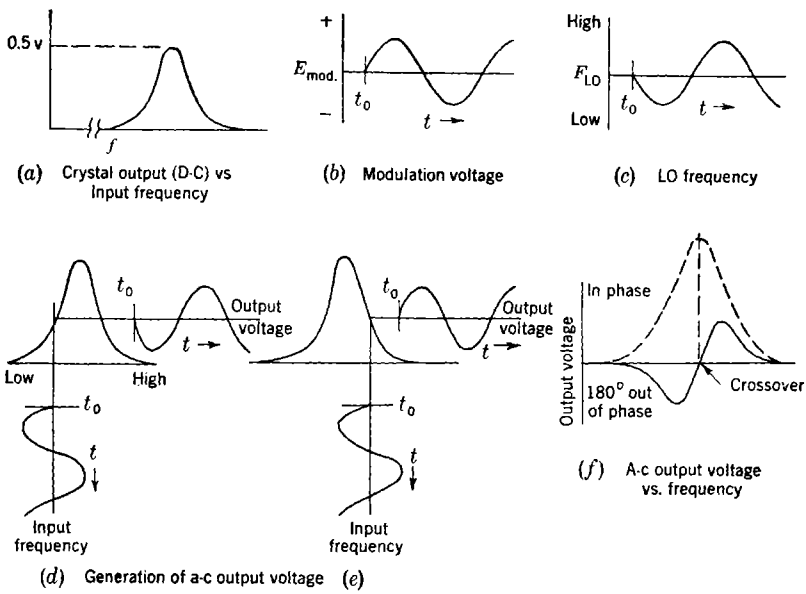

FIG. 7·32.—Waveforms in coincidence detection.

It should be noted that when the gas-discharge tube fires, since the voltage across C cannot change instantaneously, the first effect is that the cathode voltage rises toward the plate potential. Only later, as C is discharged through the tube and R (a low resistance of about 2000 ohms) does the plate voltage fall to mark the start of the sawtooth sweep. This positive pulse at the cathode acts precisely as did the positive signal from the discriminator in developing a negative search-stopping voltage across the diode. All of the explanations of Secs. 7·11 and 7·13 therefore apply.

It remains, then, to analyze the action of coincidence detection, which is illustrated in Fig. 7·32. A 1-kc/sec oscillator[1] provides a modulation voltage (*b*) of about 0.5-volt peak, which is superimposed on the LO reflector voltage. This causes a frequency modulation (*c*) to appear on the LO output signal. In (*d*) and (*e*) are shown the output voltage of the crystal when the frequency-modulated signal is applied to the cavity with the indicated pass band. To show the relative phases, the time at which the modulation voltage crosses zero with a positive slope is denoted by t_0.

Figure 7·32*a* shows the output voltage from the beacon AFC crystal as a function of local-oscillator frequency. Since the LO output power is nearly constant over the narrow range involved, this is essentially the cavity resonance curve. It may be noted here that the cavity is loaded by the local oscillator and the crystal until its bandwidth at the half-power points approximates the locking accuracy desired; that is, it is nearly equal to the peak-to-peak separation of the discriminator that would be used were the AFC of the difference-frequency type.

If now the center frequency of the local oscillator is on the low-frequency side of this response curve, the frequency modulation will cause a voltage component at 1 kc/sec to be superimposed on the d-c output voltage from the crystal. As is shown in Fig. 7·32*d* this voltage is 180° out of phase with the original modulating voltage. If, on the other hand, the center frequency is above the resonance peak, the a-c component of the crystal output voltage will be in phase with the original modulation voltage, since on this side the slope of the resonance curve is negative. Figure 7·32*f* shows this a-c component as a function of frequency and is drawn so that amplitude is proportional to the magnitude of the ordinate and phase is indicated by its polarity, a positive ordinate indicating that the crystal voltage is in phase with the original modulating voltage. It is seen that this curve has the appearance of a conventional discriminator response curve.

If the amount of frequency modulation is large, there will be some

[1] A phase-shift oscillator with a four-section tapered phase-shifting network has been found excellent for the purpose.

output voltage from the crystal at the crossover frequency. It will consist only of even harmonics of second and higher orders of the 1-kc/sec voltage, and can be removed by a suitable low-pass filter if desired.

The crystal output voltage is applied to a high-gain amplifier with negligible phase shift at the modulation frequency. Either two stages of resistance-coupled amplification may be used, or a low-impedance microphone-to-grid transformer (such as the UTC type 0-14) driving a single stage.

The output voltage from the amplifier is applied to the control grid of a gas tetrode (2050 or 2D21) and, simultaneously, a 10-volt peak signal from the 1-kc/sec oscillator is coupled to the shield grid. Each grid has a bias of about -10 volts with respect to the cathode.

Measurements on gas tetrodes show that if either grid is biased to -10 volts, the tube will not fire even if as much as $+75$ volts is applied to the other grid. Therefore, if the a-c signals on the grids are 180° out of phase with each other, firing is impossible. When they are in phase, however, and of adequate amplitude, the tube will fire once each cycle if the plate-circuit time constant permits adequate recovery between cycles. Thus, the condition stipulated at the beginning of the section is fulfilled, and the AFC system will lock. The phases must, of course, be selected so that during the hunting sweep the phase condition for firing will not be encountered until the resonance peak has been passed, or else the system will lock far out on the skirt of the response curve.

Some of the earlier beacon AFC systems used a pentode coincidence tube in place of the gas-discharge tetrode. The amplified crystal output voltage was injected at the control grid and the direct signal from the audio oscillator at the suppressor grid, both being biased beyond cutoff. Under coincidence conditions the pentode put out broad negative pulses. An additional amplifier was therefore required to obtain the positive output pulse necessary to fire a gas-discharge tube.

This arrangement operated successfully in conjunction with the standard gas-discharge-tube AFC, although two more tubes were required than are used in the circuit described at the beginning of this section. It was completely unsuccessful in conjunction with the diode-transitron control circuit, however, and this failure led to the circuit of Fig. 7·31.

The cause of the failure was essentially the enormous variation in the effective gain of the system. In addition to the normal factors of tube variability, LO output power, crystal rectification, and so forth, three potent effects exist:

1. For constant modulation voltage, the amplitude of the frequency excursion, and hence of the crystal output voltage, is proportional to the electronic-tuning sensitivity, $d\nu/dV$. In usual reflex oscillators this factor varies by a factor of 3 among tubes of a

given type. In addition, unless very loose coupling is used, the pulling effect of the cavity on the local oscillator may cause a further increase by a factor of 3; that is, tubes with a high normal $d\nu/dV$ are readily pulled, and the effect is such as to increase the effective $d\nu/dV$, but tubes with a low $d\nu/dV$ are little affected. These two factors of 3 combine to give an uncertainty in the gain of a factor of 9.

2. The bias on the control grid must be enough to ensure cutoff for every tube. If it were not, the signal on G_3 would give rise to plate output voltages capable of operating the control circuits even when no signal was present on G_1. If tube variability is such that cutoff ranges from -4 to -8 volts, then -10 volts is a reasonable design figure. If, moreover, one of the tubes whose cutoff is -4 volts is used, then a signal having a peak amplitude of 7 volts will cause a 1-volt excursion into the conducting region, but an 8-volt signal (14 per cent larger) will produce a 2-volt excursion.
3. Not only is this excursion twice as large, but the upper half of it occurs in a region of higher tube G_m; the output voltage might therefore be three or four times as large.

From the foregoing discussion, it can be seen that a mere change of local oscillator and coincidence tube, may cause a system in which the maximum available output voltage is barely adequate for the generation of control voltage to become one in which a slight deviation from the crossover frequency will produce the maximum effect. In practice the output voltage of the coincidence tube, under the high-gain condition, changes, between two successive cycles of the audio oscillator, from zero or a small value to one so great that a large potential is developed across the detector of the diode-transitron circuit. This large potential causes the local-oscillator frequency to be driven back a long way, so that an interval of perhaps 10 to 20 cycles will occur before the next crossing of the resonance peak. It will be found that the ripple in the local-oscillator frequency will amount to many megacycles per second.

It is felt that this difficulty is inherent; that the cavity-modulation scheme must always be applied to a control circuit which operates on the *frequency principle* (Sec. 7·11), and which is not affected by amplitude variations as large as 100 to 1.

Another problem peculiar to a circuit of this type should be noted. Let us ignore, for the moment, the audio-modulation voltage, and consider only the slow-sweep voltage of the hunting cycle. As the frequency is swept through the resonance curve, a positive transient voltage appears at the crystal output terminals. A badly distorted reproduction of this voltage—the distortion depending on the low-frequency amplitude and phase response of the amplifier—will appear at the grid of the coincidence

tube. At the time coincidence information should appear, for instance, the potential of this grid may be more negative than its fixed bias, and hence it may be necessary for the local-oscillator frequency to pass somewhat beyond the resonance peak before the gas-discharge tube starts to fire. On the other hand, after the gas-discharge tube does fire, the transient may cause a reduction in bias such that the firing will continue for several cycles after the reversal of the drift direction. The generation of an excessive search-stopping voltage results, so that the frequency is pulled back in much the same way as when a pentode coincidence tube is used. When the output pulses from the coincidence tube are observed, groups of 5 to 15 consecutive pulses followed by a long interval without pulses are seen instead of a more or less uniform distribution. A large ripple appears in the reflector voltage, and a spectrum analyzer shows large excursions in the oscillator frequency.

This effect can be eliminated by so designing the amplifier that it has poor response to low frequencies. On the other hand, its phase shift at the modulation frequency must be small if firing in the "anticoincidence" position is to be avoided. One solution is to admit the considerable phase shift in the amplifier which occurs when short-time-constant coupling networks are used, but to offset it by an equal phase shift in the line carrying the oscillator signal to the shield grid. In practice, the phases at the two grids should be compared when the whole system is in place, including any small bypass condensers at the reflector. Such a comparison may be easily made with an oscilloscope, and a suitable phase-correcting circuit may be installed. This is a design test, and normally should not have to be made on each individual system.

7·19. Beacon AFC for Thermally Tuned Tubes.—At the time of the writing of this section, no fully engineered circuit for the absolute-frequency AFC of thermally tuned oscillators has been developed. The circuits to be described have been built and operated but are not yet known to be fully satisfactory.

The first approach to the problem was a circuit designed by M. W. P. Strandberg,[1] who, following the lines of development described in Secs. 7·14 to 7·16, used push-pull, on-off control with reversing multivibrators. The circuit is shown in Fig. 7·33.

The r-f part of the circuit is identical with that described in the previous section. Since no modulation is applied to the reflector, the response curve of Fig. 7·32*a* applies. A sweep mechanism which will be described later causes the local oscillator to sweep back and forth across the band just as it does in the thermal AFC circuits described in Secs. 7·14 to 7·16. The crystal output voltage is applied through an amplifier

[1] M. W. P. Strandberg, "Automatic Frequency Control Circuits for Thermally Tuned Reflex Oscillators," RL Report No. 955.

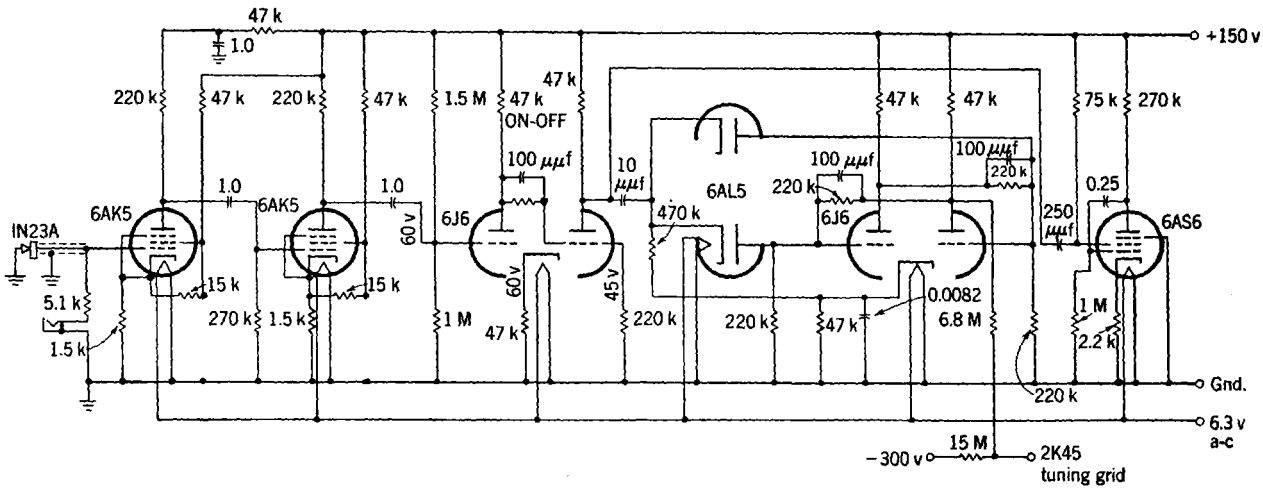

FIG. 7·33.—Beacon AFC for 2K45.

having very good low-frequency response to a "trigger shaper," TS. The TS is essentially a reversing multivibrator similar to those previously described, except that one of the grid-plate crosscoupling resistors is replaced by the coupling of the common cathode.

The first output voltage from the crystal, as the operating frequency approaches the cavity resonance, is positive. This voltage actuates the TS in such a way as to preset it to a definite position. The TS signal at this reversal is ignored by the subsequent circuits.

As soon as the resonance peak is passed, the crystal output voltage starts to decrease. This negative wave causes the TS to reverse again, but this time the reversal is effective in operating the subsequent circuit, which is a heat-control reversing multivibrator similar to those described in Sec. 7·15. Thus, immediately after the frequency has passed the peak, the power switch in the tuning triode is reversed so that the frequency once more approaches the peak, resulting in a positive output voltage and the presetting of the TS once more, so that it can again operate from the negative signal received on the other side of resonance. Thus, the system is trapped between the two sides of the response curve.

The preset feature is important for, if it were not present, small fluctuations due to hum or microphonics would cause two or more successive negative impulses to appear, which would result in an extra reversal of the heat-control switch that would carry the oscillator away from the peak.

On the other hand, the sensitivity of the TS to a presetting signal must be appreciably greater than its sensitivity to a heat-control signal; otherwise the frequency might ride back over the "hump" without the TS being preset, and the next reversal of the heat-control switch would not occur. It is this extra sensitivity, apparently, that introduces the troubles which at this stage make the circuit seem impractical. For if, immediately after receiving the HC signal, the frequency should vary rapidly, as from hum or microphonics, there is a chance that a small signal adequate for presetting may be followed by a larger signal adequate for heat reversal while the oscillator is still on the same side of the peak. This extra reversal would then send the frequency away, and the system would be unlocked. Whether this difficulty can be overcome without basic circuit change is not known.

The sweep mechanism referred to in the foregoing material is similar to that used in the radar AFC circuits. A transitron (see Sec. 7·16) simply triggers the heat-control multivibrator at suitable intervals.

A circuit was devised,[1] which, it was hoped, would not be sensitive to microphonics. It is shown in Fig. 7·34. This circuit combines many of the features discussed in connection with several of the previous circuits.

[1] Strandberg, *loc. cit.*

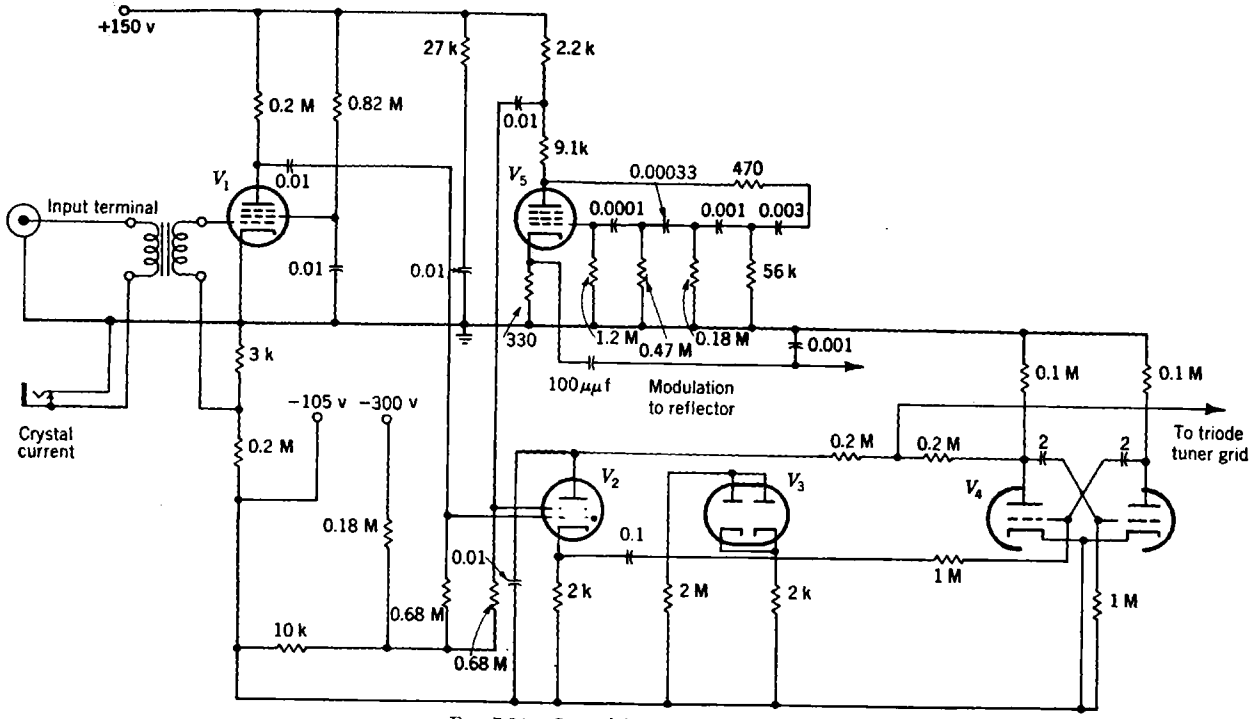

FIG. 7·34.—Second form of beacon AFC.

It is essentially of the drift-in type (Sec. 7·10). The reflector-modulation coincidence-tube scheme of Sec. 7·18 is used to provide the search-stopping information, but control is of the on-off type.

The circuit, up to the gas-discharge-tetrode coincidence tube, is identical with that used for reflector beacon AFC (Sec. 7·19). The plate voltage of the gas tube is, however, supplied from a multivibrator V_4, which provides the hunting sweep. The "ground" point for both the multivibrator and the gas-discharge tube is at a negative potential (usually -105 volts). The tuner-triode grid is tied directly to the plate of the gas-discharge tube, while the plate supply is the real ground (at chassis potential). The following action occurs.

During the desensitized or return portion of the sweep, the left-hand section of the multivibrator is conducting. Its plate potential is therefore close to cathode potential, and thus the potential of the tuner-triode grid is far below ground potential and the strut power is zero. After a suitable interval, the multivibrator reverses spontaneously, initiating the active portion of the sweep. At this time, the left-hand section is cut off. As a result, its plate load resistor acts as part of the plate load of the gas-discharge tube, whose plate is therefore at ground potential. Consequently, the strut power is high, and the oscillator frequency starts to sweep downward. As the frequency approaches the cavity resonance, the audio signal from the crystal is in the wrong phase to fire the gas-discharge tube (see Sec. 7·18), but as resonance is passed, information of the correct phase appears and fires the gas-discharge tube. The plate potential of the gas-discharge tube therefore is brought momentarily close to the potential of the cathode, cutting off the tuner triode and causing a reversal of the frequency drift. The oscillator consequently sweeps back over the hump. Presently, however, the gas-discharge-tube condenser is recharged through its plate load resistor so that strut power reappears. The strut power causes the frequency to drift back into the coincidence region, and another firing of the gas-discharge tube ensues. The circuit is locked.

To stop further action of the multivibrator when the system is locked, positive pulses developed across a small resistor in the cathode lead of the gas-discharge tube are impressed on the detector V_3, the left-hand section of the multivibrator, effectively preventing the completion of its cycle.

This circuit should not be sensitive to microphonics, since microphonics, by producing a few extra firings of the gas-discharge tube would merely cause the local-oscillator frequency to back away somewhat from the cavity peak without becoming unlocked. The one test model of this circuit that has been built showed some tendency to unlock when the local oscillator was tapped. The cause of this unlocking has not yet been determined.

CHAPTER 8

SPECIAL MEASUREMENT TECHNIQUES

The purpose of this chapter is to outline some of the special measurement techniques that have been used in conjunction with the design and testing of microwave mixers. There are many microwave and low-frequency techniques that have had general use in the microwave-radar development program. These will not be discussed here because they are well described elsewhere. For discussions of such subjects as admittance measurements, power measurements, and the design of signal generators, power meters, and standing-wave detectors, the reader is referred to Vol. 11 of this series. Only those techniques and pieces of apparatus which have been used primarily for the design and testing of mixers, because of peculiarities of the problem not encountered in other microwave problems, will be discussed here.

8·1. Production Tests for Losses of Signal Power.—A mixer cannot be tested, in production quantities, for correct dimensions and good electrical contacts so simply as can many other pieces of microwave equipment. In the design of a mixer, the tuning of the crystal mount is one of the most important features, and this is determined by making standing-wave-ratio measurements for large numbers of crystals. The work is reduced by using crystals representative of the extremes in admittance, selected from a large number of crystals on the basis of admittance measurements. For production tests, admittance measurements by standing-wave-ratio methods are tedious and do not necessarily reveal losses due to such causes as poor contacts.

As discussed in Chap. 3, the r-f tuning of a mixer should be based on measurements of the admittance for a small signal, with the local oscillator operative and coupled to the proper degree and with a matched i-f load and any preselecting r-f components that are to be used in place. In practice, however, it has been found that the admittance measured in this way is almost identical with that found if a signal at the local-oscillator level is applied to the mixer, without a local-oscillator voltage being present. This leads to a simple test involving only admittance measurements for such a signal; but the fact that the mixer crystal is also a detector can be utilized to make an even simpler test.

This test is a comparison of the rectified crystal current produced in the mixer by each of a set of crystals representing the extremes in admittance of a large group at a signal strength equal to the optimum

local-oscillator level, to that produced in a tunable crystal holder by the same signal when the tunable crystal holder is tuned for maximum rectified crystal current. The apparatus used for such a test is illustrated in Fig. 8·1. The signal generator is padded with a matched variable attenuator and this combination provides a signal source that is matched to the waveguide and adjusted to deliver power at the required level. Figure 8·1*a* shows the necessary arrangement of apparatus for testing a single mixer with an iris-coupled local oscillator designed for operation with a TR switch. The TR switch must be used in the test since it provides some tuning of the mixer and changes the dependence of the power delivered to the crystal on the r-f admittance of the crystal. Each of four or five borderline crystals are put into the mixer and the maximum crystal current obtainable by tuning the TR cavity is noted. Then the mixer and TR switch are replaced by the tunable crystal holder,

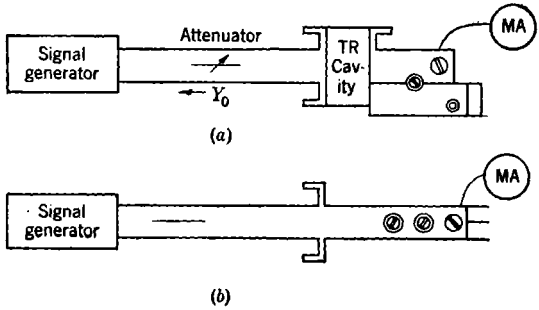

FIG. 8·1.—Apparatus for production testing for r-f tune and loss in mixer.

and for each crystal the mount is tuned to give maximum crystal current. At this level (0.5 to 1.0 ma), the crystal current for most crystals is approximately proportional to the power absorbed and, therefore, the ratio of the crystal currents produced by the same crystal in the two mixers shows approximately the transmission loss and reflection loss due to mismatch in the tested mixer. Experience shows how much loss can be expected for a properly constructed mixer. A badly constructed mixer will show up as having a large loss for some of the crystals. A poor electrical contact will show up as a large loss for all of the crystals. A limit of 2 db can usually be set on the sum of the loss in the TR cavity and the loss due to mismatch, and the crystal current in the tested mixer should therefore be at least 63 per cent of that in the tunable mount for each crystal.

If the mixer is to be used over a wide band, it is well to make this test at each edge of the band. For testing a large number of mixers, the tunable crystal holder need be used only frequently enough to ensure that the signal-generator power level has not changed, and that all of the

crystals are unchanged in rectification efficiency. To avoid burnout, care must be taken, in inserting the crystals, not to allow an electrostatic discharge to pass through them from the body.

A test of the reflected power alone could be made almost as simply by means of a directional coupler on the signal-generator waveguide adjacent to the mixer, so arranged as to couple to the reflected wave only. This method would eliminate the need for a comparison with the tunable mixer, but it would not necessarily show a source of loss in the mixer other than mismatch. With a mixer designed for use with a tunable TR cavity, the reflection coefficient that can be tolerated depends upon the phase, because of the transmission loss of the TR cavity, as shown in Chap. 3; therefore, a test in which only the reflected power is measured is not so informative as the one described, which measures both the reflection loss and the dissipative loss.

8·2. Local-oscillator Coupling.—In most unbalanced mixers, the LO coupling circuit has some effect on the transmission of received signals into the crystal. It is important to know whether sufficient local-oscillator power can be coupled into the crystal without a loss in received signal strength at the crystal because of interaction of the two circuits. Such a test can be made with the apparatus just described, by measurement of crystal current only.

The test for local-oscillator coupling, too, must be made with each of the selected representative crystals. One of these crystals is put into the crystal mount of the mixer, and, with the TR cavity tuned for maximum crystal current at a level of 0.5 to 1.0 ma, the crystal current is observed as a function of the LO coupling adjustment. This observation is made with the local oscillator inoperative. Then the signal-generator power is attenuated to the extent that the crystal current produced by this signal is vanishingly small, and the local oscillator is turned on. The local oscillator must be set at the proper frequency, relative to the signal generator frequency, to produce the desired intermediate frequency, because when a resonant TR cavity is used, the coupling depends on frequency. The crystal current produced by the local oscillator is observed as a function of the coupling adjustment. Two curves can be plotted from these two sets of observations as a function of the same parameter. If an effect of the LO coupling adjustment on the signal power delivered to the crystal is observed in the first test, the second test must show that sufficient local-oscillator drive is obtained when the local oscillator is not coupled too tightly to the signal circuit. The test must be repeated for each of the representative borderline crystals and, if the mixer is to be used in a wide band of frequencies the test must be made at several frequencies in the band. The local-oscillator tube used for the test should be one that gives, in the

mixer circuit, the smallest local-oscillator drive to be expected from production tubes of this type.

A plot of data taken in a test of this kind on a 3.33-cm mixer with an iris-coupled local oscillator is shown in Fig. 8·2. The abscissa is the number of turns outward, of the capacitive screw in the coupling iris from the position in which it completely crosses the waveguide. For each of four borderline crystals there are two curves, one representing the crystal current from the local oscillator, and the other representing the

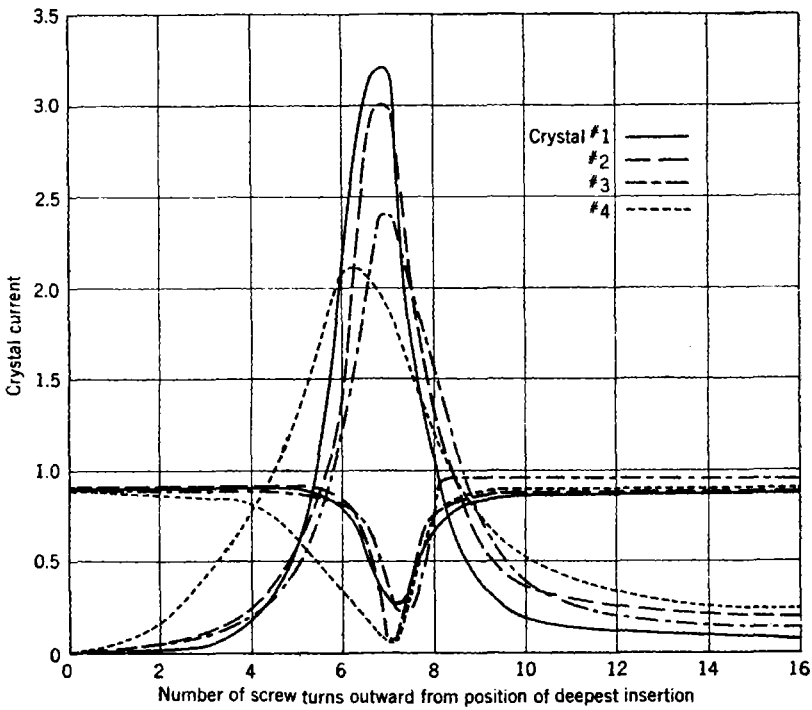

FIG. 8·2.—Data from test of LO interaction with 3.3-cm mixer and four borderline crystals.

crystal current from the signal generator, entering the mixer through the TR cavity. The screw used was long enough to allow the coupling iris to be tuned through resonance, where the maximum local-oscillator power is coupled to the crystal. A very large diminution in signal power occurs in the neighborhood of resonance of the iris, and therefore that region must be avoided. The parts of the curves to the left of the resonance region correspond to a screw longer than sufficient to produce resonance, and those to the right to a length shorter than the resonant length. A crystal current of 1 ma can be produced from any one of the

crystals, for either screw length, with a signal loss of no more than 0.5 db; hence, the coupling iris could be operated on either side of resonance. In practice the screw is cut off to a length sufficient to produce about 1 ma of current, at maximum insertion, to avoid the use of a local-oscillator tube delivering insufficient power to drive the crystal without loss in signal power.

With a 10-cm mixer, using a capacitive probe for local-oscillator coupling and without provision, by such means as a resistor disk, for a matched load for the local-oscillator cable, serious absorption or reflection of signal power by the local-oscillator circuit can occur. A test of the same kind as that just described may be used to detect this loss. If, with the local oscillator inoperative, power from a signal generator enters the mixer and produces a crystal current about equal to that which would be produced by local-oscillator power, it is found that the crystal current falls off when the probe is screwed in for close coupling. The magnitude of this effect depends upon the admittance presented to the coupling probe by the local-oscillator circuit. If the length of line between the probe and the loop in the local oscillator is varied, a length can be found at each signal frequency, for which the effect on the signal circuit is very large even with a small probe insertion. This length corresponds to resonance in the local-oscillator cable. Because the local oscillator is operated at a different frequency from the signal, the resonance may not correspondingly enhance the efficiency of the local-oscillator coupling. Thus a serious loss in received signal strength can occur. If a resistor disk is so placed relative to the probe that the local-oscillator line is matched to a wave traveling toward the mixer, this resonance is prevented because the admittance at the probe cannot be made smaller than that of the disk. Such a disk thus serves a double purpose, since its original purpose was to prevent LO frequency discontinuities. Even with a resistor disk, the 10-cm mixer may still be subject to interaction between the signal circuit and the LO coupling circuit, and any design should be checked by a test of this kind.

8·3. Over-all Noise-figure Measurements.—One technique for making over-all noise-figure measurements of receivers requires a very well-shielded c-w signal generator with a calibrated output power, a stable i-f amplifier of known equivalent noise bandwidth, and a reliable output power meter for the receiver.

Suitable signal generators with calibrated output attenuators and power-measurement apparatus for making an absolute calibration of the available output power are described in Chap. 4, Vol. 11 of this series. The i-f amplifier should be designed for the output admittance of the mixer to be used, and its effective noise figure with this generator admittance must be known. The output meter need not be calibrated in

terms of absolute power, but the law of response should be known, to allow precise measurement of power ratios. For this purpose a thermocouple and microammeter, or a crystal and microammeter, may be used as a second detector. A crystal used for this purpose should be tested to determine the relation between the rectified current and available i-f power. If the current meter has a full-scale sensitivity of a few microamperes or less and a resistance less than 100 ohms, most crystals will give a rectified current directly proportional to the square of the impressed voltage and thus proportional to the available i-f power. To avoid the necessity of an output indication of known response, or to allow calibration of the output meter, a calibrated i-f attenuator may be used in the receiver. Instead of increasing the incident r-f power to change the

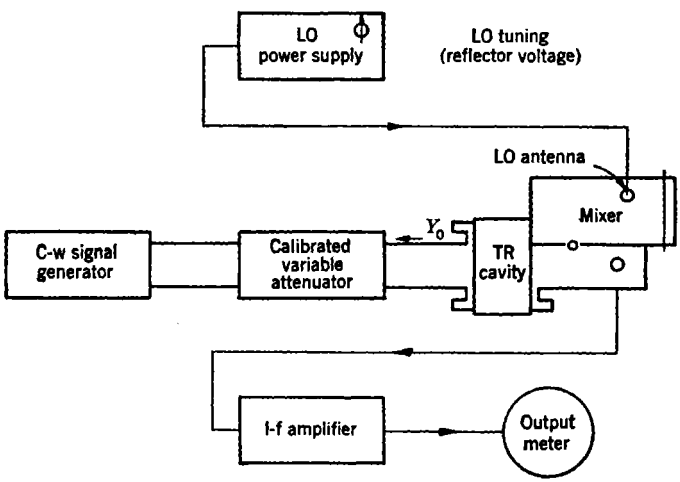

FIG. 8·3.—Apparatus for measurement of the effective over-all noise figure of a receiver.

output meter reading by a given factor, a known attenuation may be put into the amplifier and the input power increased to make the meter read the same value as before.

Figure 8·3 is a block diagram showing the way in which this apparatus is used. With the local oscillator at the correct frequency and at the correct power level in the mixer, and with the signal-generator attenuator set to give no output power, the i-f amplifier gain is set to make noise from the amplifier give a reading less than half scale on the output-power meter. Then the signal-generator power is increased until the output-meter reading is doubled, care being taken that the local oscillator and TR cavity are tuned to give maximum receiver response. The effective over-all noise figure of the receiver is then the ratio of the available signal-generator power at this last setting of the attenuator to kTB, where B is the equivalent noise bandwidth of the i-f amplifier.

For this measurement to constitute a measurement of the merit of a mixer, several other things must be known. In practice the TR cavity will be connected to a duplexer, which affords effectively a matched waveguide generator for the received signal power. It is, therefore, important that the combination of signal generator and calibrated attenuator does represent a generator matched to the waveguide. Since a cutoff attenuator is usually used as the variable attenuator of the signal generator, an additional matched dissipative pad should be used in the output line of the cutoff attenuator. The i-f admittance of the crystals used in the tested mixer must be known to allow the i-f-amplifier noise figure to be known. A noise figure larger than expected could result from an i-f output admittance for the mixer corresponding to a large noise figure for the i-f amplifier. This could not be considered a fault of the mixer, for an amplifier with a different input circuit would correct the situation.

The TR cavity has been included in the diagram to illustrate a point. The over-all noise figure for a receiver using a mixer and TR cavity must be measured with the TR cavity in place, since this component influences not only the local-oscillator coupling but also the conversion loss, effective noise temperature, and i-f output admittance of the mixer. In addition, the transmission loss of the TR cavity is affected by the r-f admittance of the crystal, and consequently the effect of the TR cavity cannot be taken into account by the assumption of some average transmission loss for a cavity between a matched generator and a load.

If all of these precautions are taken, the test still does not constitute a test of the mixer unless the noise figures to be expected from the crystals used are known. These noise figures may be evaluated by independent measurements of the crystal conversion loss and noise temperature, or relative values may be obtained by measurement of the noise figures for the same crystals in a mixer known to operate properly with these crystals. For this purpose, a mixer that does not require a TR cavity and that has a tunable crystal mount is useful. Such a mixer may be substituted for the mixer to be tested, and tuned to give minimum noise figure for each crystal. The ratio of the noise figure obtained for this mixer, to that obtained for the one being tested, does represent a measure of the operation of the mixer on test, provided that the i-f amplifier noise figure is known to be the same for the i-f output admittances associated with each mixer. If it is not the same, one of the sets of measurements must be corrected to compensate for the difference.

Because of the effect of the reflection of the image frequency and the filtering of local-oscillator noise by the TR cavity, the noise figures of the receiver with these two mixers may not differ by an amount to be accounted for by TR-cavity loss. The noise figure of a mixer-and-

amplifier combination, including the TR cavity, is often as small as that of a mixer without a TR cavity. When this is so, the filtering of local-oscillator noise and the reflection of the image frequency by the TR cavity more than make up for the transmission loss of the TR cavity. It is apparent that an over-all noise-figure measurement is not the best way to determine the r-f tuning of a mixer, although it does represent a measurement of the quantity which is of most direct importance. A better set of quantities to measure would be the conversion loss and effective noise temperature of the mixer.

The same apparatus, with the addition of an i-f noise diode and an adjustable capacitance at the input terminals of the i-f amplifier, can be used to measure the effective noise temperature and the i-f admittance of the crystal. From these values, in combination with the effective over-all noise figure and the effective i-f-amplifier noise figure, associated with the measured i-f admittance, the conversion loss of the crystal can be calculated by substitution into the standard formula for the over-all noise figure as a function of these quantities. The noise diode may be added in such a way that the crystal appears as the load admittance at the plate of the diode, as shown in the circuit of Fig. 2·35. In addition, a small variable condenser across the output terminals of the mixer allows the susceptance part of the i-f admittance of the crystal to be tuned out.

The noise diode may be used as follows. Several resistors, having conductances covering the range of conductance expected for the i-f terminals of a mixer (800 to 8000 μmhos, for instance), are put, in turn, into the crystal holder of the mixer. The effective noise figure of the i-f amplifier associated with each of these conductances can be found by measuring the plate current of the noise diode required to double the output noise power from the receiver alone. For each resistor the variable condenser is set to minimize this current. The effective i-f noise figure is then

$$F^*_{\text{i-f}} = \frac{20I}{G}$$

where I is the diode plate current and G the conductance of the resistor unit. It is very important that sufficient plate voltage be used on the diode to obtain saturation plate-current values, and that the plate current be regulated by the filament temperature. This ensures that there is no space-charge smoothing and that the noise is pure shot-effect noise.

When the values of the i-f noise figure for all values of i-f conductance are known, the effective noise temperature of the crystal can be found by a comparison of the output noise power of the receiver when the crystal is in place, with that when a resistor having the same i-f con-

ductance is in the circuit. A measurement of the i-f conductance of the crystal is required, and for this, too, the noise diode can be used. The i-f-amplifier gain may be set to give a particular output noise power with a resistor representing the i-f conductance of an average crystal in the mixer in place of the crystal. With this gain setting, the diode current required to produce a given deflection of the output meter for each of the various resistors may be measured. The values of diode current obtained in this way may be plotted as a function of i-f conductance. If the crystal is put into the mixer and the diode current that is required to give the same increase in output noise power at the same gain is measured, the i-f conductance of the crystal may be read from the plot. In each of these operations the susceptance of the output terminals of the mixer is resonated out by proper setting of the variable capacitance.

The labor of these measurements can be lessened by the use of the equivalent five-eighth-wavelength-line input circuit used in the crystal noise-temperature test sets and described in Sec. 2·18. This method has the advantage that the noise output power is independent of the i-f conductance of resistors put into the mixer, and the i-f noise figure is reasonably constant for the range of conductances of interest. The addition of an adjustable condenser would allow compensation for the susceptance part of the i-f admittance of a crystal mixer. Unfortunately, however, this condenser may not be adjusted by simply maximizing the receiver response because the equivalent eighth-wavelength line transforms its effect into that of a variable conductance at the first amplifier grid. If mixers in which the susceptance part of the i-f admittance varies are to be tested, it may be safer to use the simple input circuit and to take into account the effect of the i-f conductance on the output noise and on the noise figure.

Measurements that involve the beat frequency between two c-w oscillators, as in the above example, are often rendered difficult by the drifting of the relative frequency of the oscillators. This is particularly troublesome at the higher frequencies and with a narrow i-f amplifier pass band. Continual adjustment of the local-oscillator frequency must be made to ensure that the beat frequency is at the peak of the i-f amplifier response. Sometimes the signal generators may have frequency-modulation components, due to ripple in the power supplies for instance, sufficient to cause the beat frequency to spread over a band of frequencies wider than the pass band of the i-f amplifier. In such a case, the measurements of over-all noise figure and of conversion loss would be in error because the r-f power measurements would include the power contained in the whole spectrum of the oscillator.

To reduce these difficulties it is helpful to add to the test apparatus an AFC circuit arranged to maintain the correct difference frequency

between the signal generator and the i-f amplifier. For this purpose a standard f-m communications receiver (Hallicrafters—S-27) has been used. A small amount of the i-f signal in one of the later stages of the i-f amplifier is applied to the communications receiver, which is tuned to the intermediate frequency. The d-c component of the f-m-discriminator voltage may then be used as an AFC voltage, added in series to the reflector voltage of the local oscillator. The only changes that need be made in the circuit of the communications receiver are the removal of the discriminator circuit from ground potential, so that the reflector supply voltage is not short-circuited, and the addition of fairly large condensers (0.01 μf) from the reflector lead to ground to prevent oscillation of the AFC circuit. A reversing switch that inverts the sense of the discriminator voltage at the reflector lead allows the local oscillator to be operated either above or below the signal frequency.

This AFC circuit will maintain the correct difference frequency between the signal and local oscillator even when the signal strength is sufficient to increase the output power of a 1-Mc/sec-wide i-f amplifier by only about 10 per cent. At the level of signals usually used for noise-figure measurements, the control is very good. The pass band of the i-f amplifier may be observed on the output meter of the communications receiver by tuning the receiver through it, since the intermediate-frequency voltage developed is always almost exactly that read on the dial of the communications receiver, provided the AFC circuit is locked. That it is locked can be confirmed by variation of the reflector supply voltage. As this voltage is varied there will be an opposing variation in the output voltage of the discriminator and practically no change in the beat frequency or in the output voltage of the i-f amplifier of the noise-figure test apparatus.

8·4. Radio-frequency Noise Generators.—In many respects, it is more convenient to use r-f noise generators for the measurement of over-all noise figures than to use c-w signal generators. An r-f noise generator that has a uniform noise spectrum over a frequency band that is broad compared with the receiver pass band allows the effective over-all noise figure to be measured, independently of the shape or width of the receiver pass band. R-f noise generators are discussed in some detail in Chap. 4, Vol. 11 of this series. Only a qualitative description of the types which have been used and the methods of application to noise-figure measurements will be given here.

A reflex-klystron oscillator can be used as an r-f noise generator if it is supplied with the usual heater and accelerator voltages, but with a reflector voltage that does not produce oscillation. The noise spectrum in the output line is determined by the resonant cavity of the tube, and therefore the tube must be one which would ordinarily be used as an

oscillator at the receiver frequency. To make the tube appear as a matched generator, a matched dissipative attenuator pad is used between the tube and the mixer of the receiver. In the 10-cm band, for instance, a type 417 reflex Klystron with a flexible output cable having about 10 db of loss has been used. At 3.2 cm, a 2K25 oscillator, coupled directly to a waveguide but with a resistance-strip attenuator between the tube and the output end of the waveguide has been used.

The available noise power from these generators can be defined in terms of the equivalent noise temperature of the matched termination formed by the attenuator. If this temperature is T times room temperature, the effective over-all noise figure of a receiver is simply the value of $(T - 1)$ that produces twice as great a noise output power from the receiver as is produced when the noise generator is shut off. With ordinary oscillators, and with receiver bandwidths not exceeding a few megacycles per second, the equivalent noise temperature of the generator can be regarded as constant throughout the pass band of the receiver. There may be a contribution of noise converted from the image frequency of the receiver, but an intermediate frequency of 30 Mc/sec in a receiver for 9000 Mc/sec is sufficiently high to make the noise temperature of the generator nearly unity at the image frequency, because of the selectivity of the oscillator cavity. Thus, a generator of this kind can be used to make measurements of the over-all receiver noise figure, if the equivalent noise temperature of the generator can be measured.

For the purpose of calibrating a noise generator, an apparatus for measuring crystal noise temperature may be used. A standard mixer with a local oscillator and a crystal of known conversion loss are required. With the noise generator connected to the mixer and the generator tuned to one of the two sensitive frequencies of the test set, the noise temperature of the crystal mixer is measured with the noise generator on and off. The difference between the noise temperatures of the mixer measured with the generator turned on and off is directly the required value of $(T - 1)$ of the r-f noise generator divided by the conversion loss of the mixer. Values of T up to several hundred, including the effect of the buffering attenuator pad, can be obtained from reflex oscillators if sufficient accelerator voltage is used. The effective noise temperature may be varied by changing the attenuation, or the accelerator or heater voltages of the tube.

A noise generator of another type is a crystal-rectifier unit mounted in a standard waveguide or coaxial-line crystal holder. Considerable r-f noise power is generated by such a crystal if a direct current is forced through it in the backward (high-resistance) direction. A current of 5 to 10 ma, which may require a voltage as large as 6 volts, results in a noise generator having an effective temperature 30 to 100 times room tem-

perature. Currents lower than 5 ma do not reduce the noise temperature greatly, and give somewhat more stable operation. It is well to allow the current to flow for several hours before calibration is attempted, because it is observed that the device becomes stable after such a period of operation. A current meter, used with the noise-generating crystal at all times, allows detection of a change in its d-c characteristic which might make necessary recalibration of the unit.

The calibration procedure for the crystal noise generator is similar to that for the reflex oscillator. It is important in this case, however, that local-oscillator power from the receiver does not reach the noise crystal because such local-oscillator power would certainly affect the effective noise temperature of the device. All noise components that,

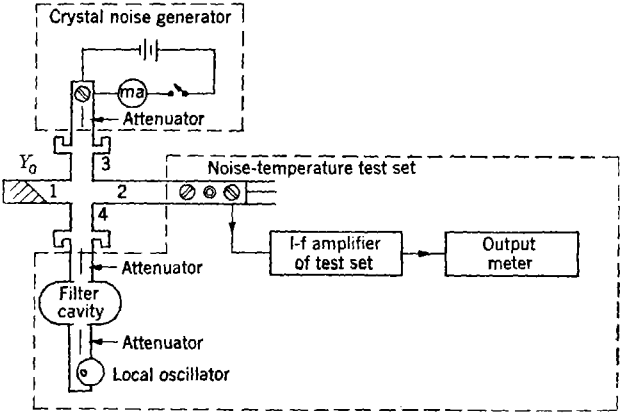

FIG. 8·4.—Apparatus for calibration of crystal noise generators.

when mixed with the local-oscillator frequency, would give components in the receiver pass band would contribute to the noise power available in the vicinity of the local-oscillator frequency. A circuit such as that shown in Fig. 8·4, therefore, may be used with the crystal-noise-temperature test set. All of the pieces except the magic T and the noise generator are parts of the test set and the part labeled "I-f Amplifier" is meant to include the five-eighth-wavelength-equivalent line, the preamplifier, and the communications receiver of the test set. The local oscillator, filter cavity, and buffering attenuators of the test set are disconnected from the mixer and attached to arm (4) of the magic T. A matched termination is placed on arm (1), and the crystal of known conversion loss in the mixer is selected to be matched to the waveguide at the local-oscillator frequency. Thus no local-oscillator power is coupled into the noise crystal. An attenuator is shown as a part of the noise generator. This attenuator serves to make the generator appear

matched to the line, both when it is turned on and when it is turned off. An alternative to this procedure is to select the crystal or to tune the crystal mount so that the crystal is matched to the waveguide for small signals when the current is flowing. A larger noise power can be obtained in this way, but an attenuator must be inserted when the current is broken because the crystal is then no longer matched to the waveguide. In the 1.25-cm band, a dummy load that makes the crystal mount matched to the waveguide has been inserted in place of the crystal.

The noise crystal develops a noise spectrum that is uniform over a relatively wide frequency band. When the noise crystal is used for measuring receiver noise figures and for calibration, there is an equal contribution to the converted i-f noise power from the r-f noise in the two sidebands of the local oscillator. The desired value of $(T - 1)$ of the generator connected to the crystal mixer of the test set would, therefore, be just half the change in mixer noise temperature times the conversion loss of the mixer. The value of $(T - 1)$ of the noise generator connected to the magic T is the whole product of the change in i-f noise temperature and conversion loss, however, because one-half the available noise power is lost in the load on arm (1) of the T.

The noise crystal must also be protected from local-oscillator power when it is used to measure receiver noise figures. The local oscillator and the noise crystal, therefore, should be coupled to a nonresonant mixer circuit with a magic T or a similar circuit, as in the calibration apparatus. For this reason, an ordinary unbalanced mixer and local oscillator cannot be tested with the noise crystal unless a resonant cavity, such as a TR cavity, prevents the leakage of a large amount of local-oscillator power into the noise crystal. If such a cavity is used, filtering of the image-frequency sideband is also obtained, and the calculation of the noise figure of the receiver from measurements with the noise crystal must take into account only a single sideband.

Because of the difficulty of removing local-oscillator power from the signal circuit of most mixers, the reflex oscillator is a more dependable noise generator than the noise crystal. It has the disadvantage, however, that it must be tuned to the receiver frequency. On the other hand, its calibration may be expected to hold under much less restricted conditions and over a longer time than can that of the noise crystal. If the output line of an oscillator can be made nonreflecting, the equivalent noise temperature is practically constant over the range of frequencies to which the tube can be tuned. For example, a single calibration can be used for a 417 Klystron, with a matched-cable attenuator, for the wavelength band from 9 to 11 cm.

8·5. Apparatus for Measurement of the Effect of Image Reflection.— As an example of apparatus of the kind that is useful for experiments

with converters and mixers, an apparatus developed by E. R. Beringer, M. C. Waltz, and C. P. Gadsden for experiments with welded-contact germanium crystals will be described. It was desired to measure the conversion loss and noise temperature of the mixer under many conditions of tuning at both the signal- and image-frequency terminals of the mixer. The i-f output admittance of the crystal was known to vary over a very wide region including negative values of the conductance, and the i-f input circuit was designed to allow measurement of the mixer parameters for the whole range of expected i-f admittances.

A circuit diagram showing the essentials of the i-f input circuit used is given in Fig. 8·5. There is no transformation of the crystal output admittance, since small conductance values were expected. The inductance L resonates at the intermediate frequency with the combined

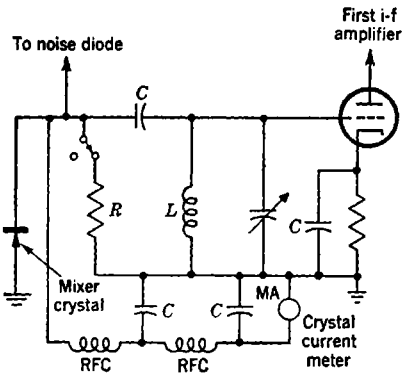

FIG. 8·5.—I-f input circuit used for measuring apparatus for welded-contact germanium crystals.

capacitance of the mixer, the tube, and the variable condenser when the condenser is set at about the middle of its range. The adjustment of the variable condenser allows compensation for the susceptance component of the crystal output admittance. A switch allows a resistor to be shunted across the crystal output terminals if desired. If the output conductance becomes negative and has an absolute value exceeding that of the positive conductance of the input circuit and tube, oscillation at the intermediate frequency occurs. The added conductance of the resistor allows the total conductance to be kept positive.

The r-f part of the circuit is shown symbolically in Fig. 8·6. The local oscillator and noise generator are connected independently to the mixer through the first magic T. A filter cavity is used to remove noise sidebands from the local-oscillator signal, and attenuator pads are provided to make each of the generators appear matched to the waveguide. In the arm attached to the mixer there is a second magic T

with a resonant cavity in one arm and a plunger in another. The plunger is adjusted so that all signals at frequencies other than those in the region of the cavity resonance are transmitted through to the mixer crystal. At the resonant frequency of the cavity, the input admittance of the cavity is a very small conductance and, therefore, waves of this frequency are reflected from the T. If the cavity is tuned to the image frequency of the mixer, any image-frequency wave developed by the mixer is reflected back to it from the magic T. The phase of the reflected wave is determined by the adjustment of the variable length of line between the T and the mixer crystal. A sliding-screw tuner in the arm between the two magic T's allows tuning of the signal-frequency admittance of the mixer. In this way, independent control of the signal and image frequencies is obtained.

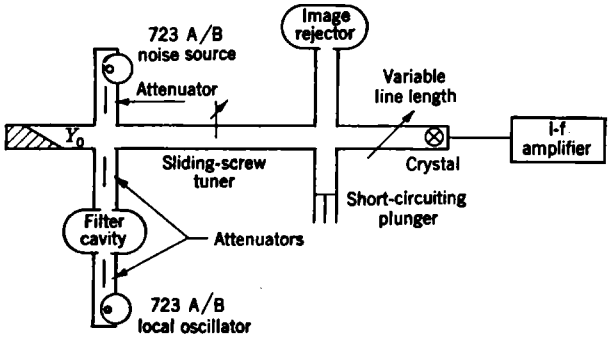

FIG. 8·6.—R-f circuit for measuring the effect of the reflection of the image frequency on the receiver noise figure.

This apparatus is used in the following way. With various dummy resistors substituted for the mixer crystal a curve of the i-f-amplifier noise figure, as a function of the i-f conductance of the mixer, can be made from data taken with the i-f noise diode. Also, by use of the i-f noise diode and the resistors, a corresponding curve can be plotted of the i-f amplifier output noise power. The change in output power of the receiver with a given gain setting is measured as a function of the conductance of the output terminals of the mixer when the diode current is increased from zero to a particular value. From these data the i-f conductance of the crystal, for any condition of the r-f tuning, can be found. Therefore, the i-f noise figure is known. The r-f noise source may then be turned on to determine, from the change of the output noise power from the receiver, the effective over-all noise figure of the receiver. Since the available r-f noise power is known from the calibration of the r-f noise generator, if the available i-f noise power at the crystal due to this r-f noise power were known, the conversion loss of the crystal would be

found. The available converted i-f noise power can be found by comparison with the available noise power from the i-f noise diode, since the crystal conductance is known. The i-f noise diode may be set at a current that produces the same change in the output noise power from the receiver as does the r-f noise generator. The conversion loss of the mixer is

$$L = \frac{G(T - 1)}{20I},$$

where I is the noise-diode current, T the effective noise temperature of the r-f signal generator, and G the i-f output conductance of the mixer. From the conversion loss, the effective i-f-amplifier noise figure and the over-all noise figure, the noise temperature of the mixer can be found from the usual formula

$$F^*_{\text{over-all}} = L(F^*_{\text{i-f}} + t - 1)$$

where t is the desired noise temperature.

Thus, the apparatus can be used to find the two quantities, L and t, which are the measures of the merit of the mixer. The apparatus has been used in a study of the dependence of L and t, for welded-contact germanium crystals, upon the various tuning conditions of a mixer, in the hope that some condition would be found which gives an unusually small over-all noise figure. No such tuning conditions were found, although, as discussed in Chap. 2, the i-f output admittance could be varied by the r-f tuning elements over a very wide region, including a region of negative conductance. If a similar apparatus were to be used for measurements with ordinary crystals, the shunting resistor in the i-f input circuit would not be needed, since negative conductances do not occur with most crystals.

Apparatus of this kind would be useful for the measurement of L and t for ordinary crystals, as a function of the phase of the image reflection. Some work of this kind has been done, and the indication is that some improvement in the over-all noise figure of a receiver is to be gained by proper phasing of the image-frequency reflection. The data are insufficient to allow a definite statement to be made about the magnitude of this effect which could be realized in practice, or about the best phase of the image-frequency reflection. It does appear that the improvement resulting from the decrease in conversion loss accompanying image reflection in the best phase is not offset by an increase in the crystal noise temperature.

8·6. An Apparatus for Measurement of the Admittance Loss of a Mixer.—In Sec. 2·11, it was shown that a quantity termed the admittance loss of the mixer can be found by measurement of the dependence of the signal-frequency admittance of the mixer on the i-f load admittance presented to it. Since for most silicon crystals the admittance loss is

equal to the minimum conversion loss obtainable from the mixer with any value of signal-generator admittance, the simplicity of this measurement makes it a good tool for experimentation with mixer circuits.

An apparatus that has been used for measurements of this kind is shown symbolically in Fig. 8·7. A magic T is used as an admittance bridge, in which the admittance of the mixer is compared with that of a well-matched load on the opposite arm. It is actually the small-signal admittance that is measured, in the presence of the proper local-oscillator power supplied from the operating local oscillator of the mixer. The mixer shown under test is one with an iris-coupled local oscillator and requiring a TR cavity for proper operation of the coupling circuit.

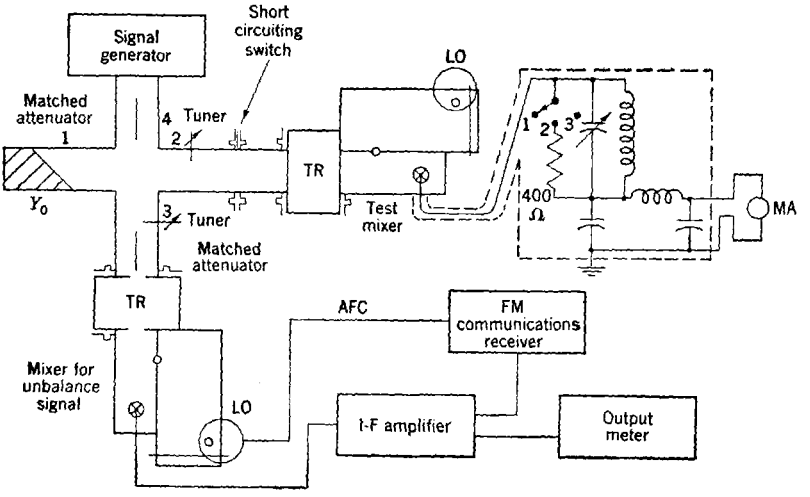

FIG. 8·7.—Bridge for measurement of admittance loss of a mixer.

The TR cavity is included in the measurement and the measured admittance loss includes the loss of the TR cavity. A small signal (less than 1 μw) is applied to arm (4) of the magic T through a matched attenuator pad. On arm (3) is a mixer for detecting the unbalance signal of the bridge. A matched attenuator pad is also used, to stabilize the input admittance of the mixer and to reduce the amount of local-oscillator power leaking from this mixer to the test mixer. The mixer used for the detection of the unbalance signal is of the same type as that shown in the test position, in the diagram. The TR cavity also decreases the leakage of local-oscillator signals between the two mixers.

Two sliding-screw tuners are used in the circuit. One between the attenuator and the magic T, on arm (3), provides sufficient tuning to make the test arm, arm (2) of the magic T, nonreflecting to a wave

sent back from the mixer under test, at the signal frequency. The other tuner, in the test-mixer arm of the magic T, is used in the test procedure. An r-f switch, formed of a plate sliding between a pair of choke connectors, is also placed in this arm of the bridge. The plate has a rectangular hole of the dimensions of the inside of the waveguide, and can be adjusted to make the waveguide unobstructed or can be moved so that, instead of the aperture, there is a short-circuiting plate across the waveguide. This short circuit provides a reflection coefficient of unit magnitude for calibration of the unbalance detector.

An i-f amplifier and an output power meter are connected to the mixer for detection of the unbalance signal. An f-m communications receiver, tuned to the center of the pass band of the i-f amplifier, provides automatic frequency control of the local oscillator of the unbalance detector. Connected to the i-f output terminals of the mixer under test is a shielding box containing a shunt-resonant circuit that has an adjustable capacitance and resonates at the beat frequency between the signal and the local oscillator of this mixer, when the i-f capacitance of the mixer itself is included. The capacitance has sufficient tuning range (at 30 Mc/sec, about plus or minus 7 $\mu\mu$fd) to compensate for any susceptance component in the crystal output admittance. The coil of the resonant circuit is designed to have a small shunt conductance. Number 12 gauge solid copper wire, wound on about a 1-inch diameter is used, and the turns are spaced about one wire diameter apart. The three-position switch allows the resonant circuit to leave the output terminals of the mixer essentially open-circuited, to provide a load near match for an average crystal (with a 400-ohm resistor) or to short-circuit the output terminals of the mixer. The d-c circuit of the mixer is unaffected by the switch, and crystal current can be read at all times.

The procedure used with this test apparatus is the following. First, the unbalance-signal mixer and the tuner in arm (3) of the bridge are adjusted. To do this, the test mixer is removed and a choke-type short-circuiting plunger is slid into the waveguide of this arm of the bridge, with the tuner of this arm retracted from the waveguide. This gives a large unbalance signal, and allows alignment of the unbalance-signal mixer, cavity, and local oscillator as well as the AFC circuit. The tuner in arm (3) is then adjusted until the unbalance signal, read on the output meter, is not affected by sliding the plunger in and out of arm (2). This means that the output meter reads the magnitude of the reflected power in this arm, independently of the phase of the reflection coefficient—a situation that results when arm (2) appears matched to the reflected wave.

With the plunger removed and the mixer to be tested replaced, and with the local oscillator of this mixer and the TR cavity tuned to the

proper frequencies, the test may now be made. These two tuning adjustments are not easy to make with the circuit shown, however, because there is no indication of their proper adjustment. To remedy this, the addition of a second f-m communications receiver would be a great help. A small resistance (about 1 ohm) placed in series between the shunt-resonant circuit and the first bypass condenser of the crystal-current circuit would have little effect on the operation of the test circuit, even if the resistor were not shorted out in the short-circuiting position of the switch. The crystal is an i-f generator of several hundred ohms internal impedance. Consequently, one ohm represents as severe a reflection for the crystal as does the shunt impedance of the circuit in the open-circuit position. A signal large enough to excite the communications receiver could be taken off across this 1-ohm resistor and the receiver used as an AFC circuit for the local oscillator of the mixer under test. The amplitude of the signal into this receiver would be a measure of the TR-cavity tuning. With the TR cavity tuned to maximize the signal to the receiver with the switch of the i-f circuit on the load-resistor position, nearly optimum results should be obtained.

With these adjustments made, the r-f switch in arm (2) of the bridge circuit is set to the short-circuiting position, and the gain of the i-f amplifier of the unbalance-detecting circuit set to make the output meter read full scale. The fraction of a full-scale deflection obtained with other terminations on the test arm of the bridge is then equal to the square of the absolute magnitude of the reflection coefficient, if there is no contribution to the output-meter reading from receiver noise. The r-f switch is then opened and the r-f tuner in the test arm of the bridge is adjusted to balance the bridge with the i-f switch set to short-circuit the i-f terminals. When this switch is changed to the open-circuit position, the signal admittance of the mixer changes, and the bridge becomes unbalanced. If the variable capacitance of the i-f resonant circuit is adjusted to make the unbalance signal a maximum, the relation between the admittance loss L_Y of the mixer and the voltage standing-wave ratio r is

$$L_Y = \frac{\sqrt{r} + 1}{\sqrt{r} - 1},$$

as shown in Sec. 2·11. Since the bridge reads the square of the absolute magnitude of the reflection coefficient, the relation between the meter reading and the admittance loss of the mixer is

$$L_Y = \frac{(1 - p)^{1/2} + 1 - \sqrt{p}}{(1 - p)^{1/2} - 1 + \sqrt{p}},$$

where p is the fraction of full-scale deflection of the meter. A curve for

this expression, for L_Y expressed in decibels for the range from 0 to 10 db, is given in Fig. 8·8.

For silicon crystals it is found that the reciprocity condition holds. The admittance loss in this measurement, therefore, represents the actual conversion loss that would result with the mixer under test if the signal generator were adjusted to have the internal admittance giving minimum conversion loss. In practice, there will be some additional loss because the

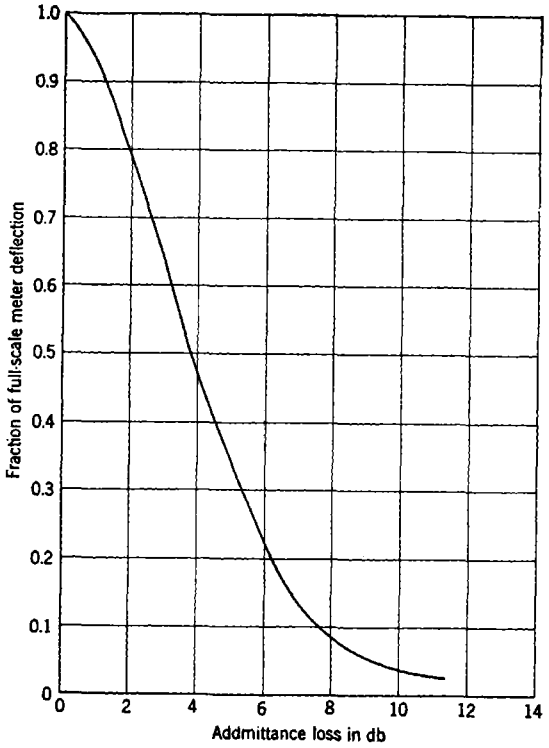

FIG. 8·8.—Admittance loss as a function of output-meter deflection.

antenna, as the signal generator, is matched to the waveguide, and the mixer may be somewhat mismatched. An approximate measure of the resulting reflection loss can be obtained with the apparatus, with the tuner in the test arm of the bridge retracted from the waveguide and with the switch in the i-f circuit in the position that presents the mixer with a resistive load. Since the resistor will not, in general, have the optimum conductance for the mixer, the r-f mismatch is not exactly that desired, but is close to that value for any reasonably large crystal loss. The output-meter reading, with the switch in this position, gives the fraction

of the incident power reflected, if the amplifier gain is set to make a complete reflection give a full-scale deflection.

Measurements have been made, with the bridge, of the conversion loss of many 3-cm mixers, and the results have agreed well with measurements made by other methods. As discussed in Sec. 2·11, the variation of conversion loss with the distance from the TR cavity to the crystal has been observed with this apparatus. Those measurements were complicated by the fact that the TR-cavity loss was included in the measurement. To prevent variation of this loss with the phase of the image-frequency reflection, the crystal mount had to be retuned for each line-length setting. Better data would probably have been obtained with a mixer circuit, such as that described in Sec. 8·5, in which the resonant cavity reflects only the image frequency.

8·7. Tests of the AFC Mixer.—To obtain satisfactory operation of a separate AFC mixer, the input signal level must be properly set, and care must be taken to ensure that spurious signals, such as TR leakage power, and signals at harmonic frequencies are not large enough to mask the desired i-f signal. The usual procedure in setting the power level is to design the AFC attenuator for about 30 db less attenuation than the total amount needed, and then to adjust the diameter of the coupling hole between the AFC attenuator and the main line of the radar set to give the desired level of 1 or 2 mw of peak power at the mixer crystal.

If it is known that no spurious signals are present, the power level can be checked by measurement of the average rectified current with a low resistance microammeter. Most crystals develop about 1 ma per milliwatt of dissipated r-f power if the resistance of the meter circuit is less than 100 ohms. With the local oscillator shut off, a microammeter of less than 100 ohms resistance may be connected to the output terminals of the crystal. With the local transmitter operating, the milliammeter reads the average rectified current. This is simply the rectified pulse current times the fraction of the time during which the transmitter is turned on. With a pulsed transmitter producing 1-μsec rectangular pulses and a recurrence rate of 1000 cps, an average rectified current of 1 to 2 μa indicates 1 to 2 ma pulse current.

Some precautions are necessary to make sure that the microammeter reads the correct current. Stray radiation picked up in the microammeter or in its leads can give rise to a rectified current, because the crystal is in the microammeter circuit. Shielding of both the meter and the leads is usually necessary to prevent this. That no such pickup is present can be shown by blocking off the r-f signal from the mixer, whereupon the microammeter reading should go to zero. A microammeter has a rather large reactance to the frequencies involved in a current pulse

of 1-μsec duration. This causes the current pulse to be stretched out and, therefore, to persist after the r-f pulse has ceased. Because the crystal response is not linear, the average current is reduced, since the current must flow through the crystal as well as through the meter. A bypass condenser should, therefore, be used across the meter to give the pulse a low-impedance path. It is only under this condition that the simple relationship between the average current and the r-f pulse power holds.

It is sometimes informative to observe the video-frequency pulse of rectified current in the AFC crystal on an oscilloscope. An r-f envelope viewer, with the AFC crystal used as a detector, makes this possible. The impedance connected to the output terminal of the crystal should not be high, however, since a bias voltage would then be developed which would change the r-f impedance of the mixer crystal and, therefore, alter the amount of power delivered to it. An instrument of this kind, calibrated as a current meter, can be used to set the r-f power level, for the pulse current can be observed directly.

A more informative observation of the operation of the AFC mixer can be made with the help of auxiliary apparatus. With a pulsed r-f signal generator having the desired available AFC power, and a spectrum analyzer, the r-f power level can be set and the presence of any objectionable spurious signals can be detected. These pieces of apparatus are used in the following way. The crystal to be used in the AFC mixer is first placed in a simple mixer that has no input attenuator. This mixer is substituted for the regular mixer of the spectrum analyzer. Power from local oscillator of the spectrum analyzer is introduced into this mixer at the proper level, or, if a local oscillator is included as an integral part of the mixer, this local oscillator is connected to the sweeping reflector voltage of the spectrum analyzer. If the pulsed signal generator is connected to the input terminals of the mixer, the spectrum is shown on the indicator of the spectrum analyzer. The gain of the analyzer is then set to show a given amplitude, in the center of the spectrum, with the desired level of pulses sent into the mixer.

The AFC mixer is then substituted for this mixer in the spectrum analyzer. The i-f spectrum coming from the AFC mixer is shown on the indicator, and if the transmitter sample has the desired amplitude, the amplitude of the spectrum will be the same as before, with the same amount of local-oscillator drive. Blocking off the AFC attenuator path with a metal plate should cause the spectrum to disappear if the leakage of signal from the radar mixer through the local-oscillator circuit is sufficiently small.

Spurious signals leaking into the AFC mixer with enough amplitude

to interfere with the operation of the AFC circuit are made obvious in a test of this kind. The presence of large pulses of harmonic power, for instance, can be detected from the appearance of the indicator of the analyzer. The presence of the intermediate-frequency components of the rectified pulse resulting from such harmonic-frequency pulses is evidenced by a continuous spectrum that covers the analyzer screen and is unaffected by the tuning of the local oscillator. The amplitude of these components has sometimes been found to be so great as to mask completely the desired beat-frequency spectrum. A signal incident on a crystal mounted in a waveguide far beyond cutoff for the fundamental frequency, connected to the output terminals of the AFC attenuator and to the input terminals of the i-f amplifier of the spectrum analyzer, produced the same pattern on the indicator. It was a test of this kind that showed the need for a dissipative attenuator in addition to the cutoff attenuator for the AFC signal. The addition of the strip of carbon-coated Bakelite inside the AFC attenuator completely removed the spurious signal in a 10-cm system, and the desired spectrum of the AFC signal was then shown clearly on the indicator. Excessive leakage of spike energy from the TR cavity, through the local-oscillator channel into the AFC mixer, can be detected in the same way.

Index

A

Absolute frequency, 294
Admittance, I-f (*see* I-f admittance)
Admittance, i-f output, 90, 178–185
Admittance bridge, 80, 367–372
Admittance loss, of mixer, apparatus for measurement of, 367–372
Admittance measurements, 352
Admittance scatter, 134–136, 168
AFC, 5, 190–202, 290–351, 360
  absolute-frequency hunting systems, 341–351
  beacon, 227–231, 234, 244, 287, 341
    reflector modulation scheme for, 342–347
    for thermally tuned tubes, 347–351
  d-c amplifier type, 313
  diode-transitron, 326–331
  double-balanced mixer, 283–287
  double-mixer, 193–202, 300
  drift-in hunting system, 314–331
  gas-discharge-tube, 315, 345
  gas-discharge-tube design theory, 317–326
  Nibbe-Durand, 333, 337
  nonhunting systems, 312–314
  separate-channel, 300
  separate-mixer, 193–202
  thermal hunting systems, 331–341
  wide-range tunable systems, 331–341
  Whitford, 332, 333, 337, 339
AFC attenuator, 196–199, 372
AFC difference-frequency systems, 295–341
AFC feedback loop, 295
AFC mixer, tests of, 372–374
AFC systems, classification of, 294
Agitation, thermal, 10
Amplifiers, 291
  d-c, 300, 312, 327
  i-f, 24
  r-f, 2, 23, 43
Amplifier design, 1
Amplitude control, 317
Antenna, temperature of, 12
Anti-TR switch, 10
Aperture coupling, 160
Attenuator, cutoff, 196, 374
Automatic frequency control (*see* AFC)

B

Back resistance of crystal, 54, 113, 297
Back resistance meter, 100, 113
Bandwidth, 2, 26, 302
  effective noise, 14, 22, 27
  optimum, 5
Bandwidth requirements, 5, 302
Barrier capacitance, 53, 92
Beacon, 223, 231, 287, 295
Beacon AFC (*see* AFC, beacon)
Beacon mixers, 190
Beacon stations, 23
Beacon tuner, 225, 234
Bell Telephone Laboratories, 43, 83–85, 115, 300, 307–308, 312, 314
Beringer, E. R., 83, 365
Bias, d-c, 88
    effect of, on mixer crystal, 249–256
Bias voltage, 95, 249, 251
Bolometers, 19
Bridge, 368
Buncher, 37
Burnout, 96–100, 118, 172–174
Burnout test for crystal, 111–113

C

Capacitance, barrier, 53, 92
  of contact of crystal, 53, 92
  i-f, 129
Catcher, 37
Cavity, precision reference, 342
  reaction, 218
  reference, 228

Cavity, transmission, 215, 220
use of, to reduce local-oscillator noise, 245–249
Cavity circuits, 34
Characteristic, d-c, 50, 90
Channel coupling, equivalent network for, 155–160
Chokes, harmonic, 174–178
Clutter, ground, 300
Coincidence detection, 344
Coincidence tube, 342, 345
pentode, 347
Cole, P. A., 30
Conductance, i-f, 111, 249, 360
negative, 90, 92
Conductors, 48
Control, frequency, 25
Control circuit, hard-tube, 326
Control voltage, 296
Controlled reflector, 324
Conversion, frequency, 26
Conversion efficiency, 58
Conversion gain, 90
Conversion loss, 100, 249, 359, 365
dependence on image-frequency termination, 75–83
Conversion-loss measurement, 101–105
Converters, 3, 26–28, 44, 119
crystal, 56–66
linear-network representation of, 59–61
three-terminal-pair-network representation of, 61–66
frequency, 24, 56
regenerative, 90, 93
superregenerative, 93
tube, 28
Couplers, directional, 146–150, 201
Coupling circuit, i-f, 271
Cross attenuation, 194, 195, 284
Crossbar mount, 171, 172
Crossover, 307
Crossover frequency, 296, 302, 304, 310, 314, 328
Crystal burnout, 96–100, 118, 172–174
test for, 111–113
Crystal checker, 113
Crystal control, 294
Crystal current, 95, 256
Crystal detector, 19
Crystal mixer (*see* Mixer, crystal)
Crystal mounts, 101, 122–126, 171–172, 279–283
for balanced mixer, 279–283
broadband, 281
inverted, 280
tunable, 131–134
for 1N26 crystals, 171
for 3-cm bands, 124–128
for 10-cm bands, 124–128
Crystal rectifier, 47–118
Crystals, borderline, 134, 353
germanium, welded-contact, 87–93, 104, 365, 367
noise temperature of, 58, 93–96, 100, 115
representative, 134, 354
specifications of, 100, 114–118
table, 117
testing of, 100–114
video, 56
Cutoff, 301

D

D-c return, 126
Detection, 20
Detector, 3
crystal, 19
first, 3
gain of, 20
low-level, 17–19, 47, 54, 111, 115, 124, 133
regenerative, 45
square-law, 19–21
quality of, 20
video, 115
Deterioration, 99, 114
Dicke, R. H., 12*n*., 63, 74, 77, 87
Difference frequency, 294
Dimensions, 114
Diode mixer, 32–34
Diode transitron, 345
Diodes, temperature-limited, 109, 365
Directional couplers, 146–150, 201, 301
Discriminators, 295, 302–308
efficiency of, 305
Foster-Seeley, 304
gain of, 305
good video balance needed by, 306
hum in, 311
microwave, 342
theory of, 308–312

Discriminators, voltage gain of, 305
with triode detectors, 307
Weiss, 305
Down-pull rate, 318, 322, 325
Drift-in, 314, 318
Drift-in systems, 331
Drifts, 25
Driving power, 34
Duplexer, 6, 96, 199
Duplexing, 6

E

Eccles-Jordan trigger circuit, 333
Effective noise bandwidth, 14, 22, 27
Electrode, keep-alive, 8, 99, 174, 175
Electronic-tuning factors, 291, 292
Electrostatic discharge, 100
Enabling circuit, 300
Enabling feature, 314
Energy level, 48
Envelope viewer, 97, 373
Equivalent circuit (*see* component for which equivalent circuit is given)
Error voltage, 295

F

Feedback, inverse, 324
Feedback loop, 290
Figure of merit, for receivers, 10–17
crystal-video, 54, 56
Filter, resonant, to reduce local-oscillator noise, 243–245
Filter cavity, 235
Filtering, 246, 358
Flat, 97, 300
Flat power, 173
Following rate, 317, 318
Forward resistance, 297
Foster, D. E., 304*n*.
Foster-Seeley discriminator, 304
Frequency control, 25, 39
of local oscillators, 290–351
Frequency-control electrode, 312, 314
Frequency-control principle, 317
Frequency conversion, 26
Frequency discontinuities, 208
caused by high-Q load circuits, 209–215
prevented by padding, 219–223
Frequency drift, sources of, 290–292
Frequency principle, 346
Frequency spectrum, 5
Frequency stability, 5

G

Gadsden, C. P., 83, 365
Gain, 11, 12, 58, 325
of detector, 20
effective gain of the system, variation in, 345
Gas-discharge tube, 300
General Electric Co., 43, 46, 87, 90
Generator, slow-sweep, 314, 316, 326
Germanium crystal (*see* Crystal, germanium)
Ground clutter, 300

H

Hard-tube control circuit, 326
Harmonic, 197, 300, 335
second, 83–87
Harmonic chokes, 174–178
Harmonic generator, 3–4
"Harmonic hash," 298
Harmonic response, 298
Harmonic shutters, 174–178
Harmonics, 61, 82, 285, 301, 372, 374
Heater voltage, 294
Hold-in range, 295
Hum, 349
Hum pickup, 306
Hunting, 295, 331
"Hybrid coil," 267

I

I-f admittance, 71–75, 79, 105, 253, 277, 359
I-f amplifier (*see* Amplifier, i-f)
I-f capacitance, 129
I-f conductance, 111, 249, 360
I-f coupling circuit, 271
I-f impedance, 256
I-f output admittance, 90, 178–185
I-f output lead, 128–131
I-f resistance, 115
I-f spectrum, 302
Image, 43
Image frequency, 27, 60, 256, 276, 358, 362, 364, 365

Image-frequency termination and conversion loss, 75–83
Image reflection, 367
Image response, 26
Image termination, 62
Impedance, cold, 9
  i-f, 256
Impedance loss, 66, 68, 80, 89
Impurity centers, 49
Incremental method, 103
Input admittance, 66–71, 122
Insulators, 48
Interference, 276
Intermediate-frequency amplifier (*see* Amplifier, i-f)
Iris, coupling, adjustable, 164
  with adjustable choke screw, 165

J

Jamming, 193, 300, 331
JAN-1A specifications, 324, 341
Johnson, J. B., 11
Johnson noise, 11, 55

K

Keep-alive electrode, 99, 174, 175
Klystron, 36
  reflex, 37–43, 206, 236, 361
Kuper, J. B. H., 237*n*.

L

"Lazy man" reversing switch, 333
Leakage, 198, 199
  particularly troublesome in AFC, 299
Line, coaxial-to-waveguide transitions, 172
Lighthouse tube, 18, 29, 33, 35, 45
  triode, 290
Littelfuse, 18
Llewellyn, F. B., 11*n*.
LO (*see* Local oscillator)
Load, matched, 200, 206
Load circuits, containing transmission cavity, 215–218
  high-*Q*, 209–215
  with reaction cavity, 218
Local-oscillator circuit, 172
Local-oscillator coupling, 172, 354–356
  capacitive probe, 140–144
Local-oscillator coupling, channel, 150–160
  for coaxial-line mixers, 142–144
  iris for, 160–166
  in waveguide mixers, 144–146
Local-oscillator coupling mechanisms, 136–140
Local-oscillator drive, 58, 252
Local-oscillator frequency, ripple in, 318
Local-oscillator noise (*see* Noise, local-oscillator)
Local-oscillator power, 57, 115, 2.5
Local-oscillator tubes, table of, 40
Local oscillators, 3, 35–37
  channel, 232
  frequency control of, 290–351
Locking, 246, 292, 302
Loop, 168
Loss, 58, 115, 353
  conversion (*see* Conversion loss)
  impedance, 66, 68, 80, 89
  transmission, 169
Lumped-constant circuits, 25
Lumped-constant circuit elements, 27

M

Magic T, 7, 259–262, 363–365
  equivalent network of, 264
  matching of, 262–264
  voltages and currents in, 264–269
Magnetron, 290
Manual tuning aid, 342
Matching, 261
Measurement (*see* quantity to be measured)
Mechanical shock, 96, 100
Merit, figure of (*see* Figure of merit)
Microphonics, 349
Microwave receivers (*see* Receivers, microwave)
Miller, J. M., 328
Mixer circuit, basic, 120–122
Mixer tubes, 28
Mixers, 3, 119
  AFC, double-balanced, 283–287
  balanced, 257–289, 301
    crystal mounts for, 279–283
    Magic T, 269–279
    simple, 257–259
  broadband two-channel, 231
  coaxial-line, with loop coupling, 180
  complete, drawings of, 180–189

Mixers, crystal, 34, 56
circuits for, 119–189
double, 194
double-balanced, 286
four-crystal, 283, 301
high-loss, 122
iris-coupled, 183
measurement techniques for, 352–374
multiple-function, 190–234
examples of, 223–234
resonant, 122
for 10-cm band, 188
single, 299
triode, 28–32
two-channel, 199–201
waveguide, 188
local-oscillator coupling in, 144–146
for 10-cm band, 171–172
Modulation, velocity, 36
Modulation method, 101

N

Nibbe-Durand AFC, 333, 337
Noise, Johnson, 11
local-oscillator, 235–256
effect of, 235–237
effect on over-all noise figure, 239–241
generation of, 235–237
magnitude of, 237–239
reduction by resonant filters, 243–245
reduction by use of a cavity, 245–249
by TR cavity, 241–243
suppression of, 257
random, 10
Noise diode, 109, 254, 359, 367
temperature-limited, 101
Noise figure, 10–17, 29
in cascade, 16
of combination, 14
effective, 13
measurement of, 15
over-all, 15, 249
effect of local-oscillator noise on, 239–241
effective, 15, 17, 43, 58, 100, 235, 250, 253
measurements of, 356–361
Noise generators, 236
crystal, 363
radio-frequency, 361–364
Noise spectrum, 236
Noise suppression, 247, 270, 273, 275
Noise temperature, 16, 235, 359
of crystal, 58, 93–96, 100, 115
measurement, 105–111
Nonhunting, 295
North, H. Q., 46, 87
Nyquist, H., 11*n.*
Nyquist theorem, 296

O

Oilcan tube, 18
"On-off" principle, 294, 331
Oscillation, 90
Oscillators, beating, 3
phase-shift, 344*n.*
reflex, 292
Output admittance, i-f, 90, 178–185
Output lead, i-f, 128–131
Overload, 206, 207
Overshoot, 335

P

Padding, 219–223
Peak-to-peak separation, 304, 310
Phase-shift oscillator, 344*n.*
Polyiron, 198, 199, 285, 301
Power, local-oscillator, 57
Precision reference cavity, 342
Preselection, 5, 8, 27, 43, 123
Preselector, 2, 23
Pre-TR switch, 175
Probe, capacitive, as local-oscillator coupling, 140-144
Production tests, 352–354
Pull-in range, 295
Pulling, 290, 317
Pulling figure, 203, 206, 213, 291
Pulse radar, 4
Pulses, 4
stretching of, 306, 312
Pushing, 291
Pushing figure, 291

Q

Quality, 100

R

Radar, pulse, 4
Radio Corporation of America, 43

Radio-frequency amplifier (*see* Amplifier, r-f)
Radomes, 291
Range-set control, 316
Raytheon Manufacturing Co., 43
Reactance tube, 292
Receivers, 1, 2
  crystal-video, figures of merit of, 54–56
  figure of merit of, 10–17
  microwave, classification of types of, 17–46
  noise figure of (*see* Noise figure)
  superheterodyne, 3, 24–26, 235
  superregenerative, 45
Receiver unit, complete, 1
Reciprocity, 64, 66, 74, 87, 371
Reciprocity theorem, 63*n*.
Rectification, physical description of, 48–52
Rectification efficiency, 207
Rectifier crystal, 47–118
Reflex klystron, 37–43
Reflex principle, 36
Reflexing, 314
Regenerative detector, 45
Representations (*see* component represented)
Resistance, back, of crystal, 54, 113, 297
Resistance, i-f, 115
  spreading, of crystal, 51, 91
Resistance card, 197, 231, 301
Resistor disk, 141, 149, 206, 356
Resonant stub, 176
Rieke diagram, 203, 211
R-f amplifier, 2, 23, 43
R-f envelope viewer, 97, 373
R-f switch, 369
Ripple, peak-to-peak, 321
Roberts, S., 77
Rochester, N., 319
Roder, Hans, 304
Rotary joint, 291
RT switch (anti-TR), 10
Runaway, 324

S

Scaling, 119
Schwinger, J., 155, 201
Search stopper, 314, 317, 326
"Second chance" feature, 338
Seeley, S. W., 304*n*.
Self-protection of mixer crystal, 172–174
Selove, W., 308*n*.
Semiconductors, 48
Sensitivity, 10, 21
Separation, peak-to-peak, 304, 310
Sharpless, W. M., 83*n*.
Shock excitation, 298
Shutdown, 176
Shutters, harmonic, 174–178
Sideband, wrong, 294, 314, 331, 332
Signal, minimum detectable, 10, 21–24
Signal-input circuit, 166–171
Sink, 204, 206, 208
Slow-sweep generator, 314, 316, 326
Spectrum, i-f, 302
Spectrum analyzer, 347, 373
Sperry Gyroscope Co., 43
Spike, 8, 97, 98, 300
Spike-blanking circuit, 300, 314
Spike energy, 99, 111, 174, 373
Spreading resistance, 92
  of crystal, 51, 91
Stabilization, frequency, 292
  inverse-feedback, 325
Stability, 290
  frequency, 212
Static, 10
Static discharge, 115
Strandberg, M. W. P., 308*n*., 347, 349*n*.
Superheterodyne receiver, 3, 24–26, 235
Superregenerative receiver, 45
Susceptance, 360, 369
Switch, r-f, 369
  RT (anti-TR), 10
  TR, 9, 70, 78, 96, 97, 114, 172, 353
Sylvania Electric Products Co., 118, 319*n*.
Symmetry control, 304

T

T-junction, 155
  E-plane, 260
  H-plane, 260
Temperature-limited diodes, 109
Terman, F. E., 294, 312
Test mount, 205
Tetrodes, 44
Thermal agitation, 10
Thermal strut, 292
Thermal time constant, 293
Thermistor, 18

Thévenin's theorem, 320
Time constant, 331
Tolerances, 114
Torrey, H. C., 76, 77, 91, 92, 111
TR-aided tuning, 170, 173, 280
TR cavity, 28, 72, 139, 157, 162, 166, 174, 179, 224, 256, 276, 358, 364
  equivalent circuit for, 167
  output loop of, 168
  reduction of local-oscillator noise by, 241–243
TR leakage, 192, 201
TR leakage power, 173, 372
TR switch, 9, 70, 78, 96, 97, 114, 172, 353
Transit-time effects, 17, 34
Transition, capacitance amplification in, 327–328
Transmission loss, 169
Transmitter sample, 296–299, 301
  coupling of, 196–199
Travis, Charles, 304
Travis circuit, 304
Trigger circuit, Eccles-Jordan, 333
Trigger shaper, 349
Triode, 35, 293
Tube mount, 146
Tuning, 70, 123, 293
  electronic, 38
  fixed, 123, 134–136
Tuning, TR-aided, 173
Tuning range, 2
Tuning screws, 132

U

University of Pennsylvania, 95
Up-pull rate, 319, 322, 325

V

Velocity modulation, 36
Velocity-modulation tube, 290
"Video hash," 298
Video pulse, 297
Video unbalance, 307

W

Waltz, M. C., 83, 237*n.*, 365
Waveguide-to-coaxial line transitions, 172
Weiss discriminator, 305
  theory of, 308–312
Welded-contact crystal (*see* Crystal, germanium welded-contact)
Western Electric Co., 43, 118
Whitford AFC system, 332, 333, 337, 339
Williams, F. C., 11*n.*
Wollaston wire, 18–19